INSTRUCTION MANUAL
Model 2850

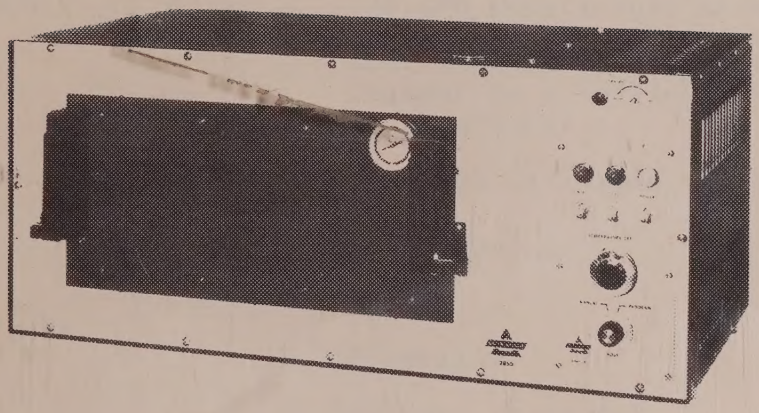

DELTA DESIGN
INC.

ENVIRONMENTAL TEST CHAMBER

ENVIRONMENTAL CONTROL EQUIPMENT FOR RESEARCH AND INDUSTRY
5725 KEARNY VILLA ROAD • SAN DIEGO, CALIFORNIA 92123

2850-0379

Printed in U.S.A.

SPECIFICATIONS

TEST AREA DIMENSION (H x W x D)	7" x 16" x 7" (17.78 x 40.64 x 17.78 Cm)
AIR CIRCULATION	140 CFM centrifugal blower with baffling provides equal distribution througout the chamber in a horizontal air flow pattern.
INNER LINER	Type 302 Stainless Steel
OUTER CASE	Aluminum
INSULATION	Fiberglas
WEIGHT	52 lbs (23.6 Kg)
POWER REQUIREMENT	120 VAC, 50 or 60 Hz, Single Phase, 20 Amp or 240 VAC, 50 or 60 Hz, Single Phase, 15 Amp.
CONTROLS	POWER On-Off Switch and Light COOL On-Off Switch and Light HEAT On-Off Switch and Light TEMPERATURE SET Control MANUAL/PROGRAM Control Switch (MODE)
HEATING ELEMENTS	Two 20 ohm Elements to give a total of 1875 Watts, Nichrome Wire.
COOLING	Liquid Carbon Dioxide (LCO_2) or Liquid Nitrogen (LN_2)
PROGRAMMING	Programmable
COOL DOWN TIME	Ambient to -53°C in 3½ minutes.
HEAT UP TIME	Ambient to +217°C in 9-3/4 minutes.

TEMPERATURE RANGE	$-73^{\circ}C$ to $+315^{\circ}C$
RESETTABILITY	$0.25^{\circ}C$
TEMPERATURE DEVIATION	$0.1^{\circ}C$
LINE VOLTAGE STABILIZATION	$0.25^{\circ}C$ for 105 to 125 VAC, Line Voltage Change $0.25^{\circ}C$ for 220 to 240 VAC, Line Voltage Change
AMBIENT TEMPERATURE COMPENSATION	$\pm 0.010^{\circ}C/^{\circ}C$
HEAT LOAD COMPENSATION	$\pm 0.040^{\circ}C$ Watt
THERMAL IMPEDANCE OF CHAMBER	Approximately $1^{\circ}C$/Watt
NULL DETECTOR CONTACT CLOSURE	Temperature will be within $\pm 2^{\circ}C$ of final temperature at 3 minutes after closure occurs.
NULL DETECTOR CONTACT RATING	1 amp, 240V, with contact protection provided by user to protect against inductive loads.

NOTE: IT IS RECOMMENDED THAT THIS MANUAL BE READ THOROUGHLY BEFORE CONNECTING EQUIPMENT TO ELECTRICAL POWER SOURCE.

INTRODUCTION

The Model 2850 Environmental Test Chamber offers an internal working volume 7" high, 16" wide and 7" deep. Air flow is horizontal at 140 CFM with baffling to provide equal air distribution.

Temperature control of $\pm 0.1^{\circ}C$ provides the precision necessary for bread-board circuit testing.

Digitized by the Internet Archive
in 2026

https://archive.org/details/manualsplus_13338

CONTENTS

	Page
SPECIFICATIONS	i
INTRODUCTION	iii
ILLUSTRATIONS	v
1 CHAMBER AND CONTROLLER DESCRIPTION	1
1.1 Chamber	1
1.2 Solid State Controller	1
1.3 Null Detector Circuit	2
2 INITIAL SETUP	2
2.1 Electrical Connection	2
2.2 Liquid Coolant	2
2.3 Liquid Nitrogen	3
3 STARTING UP PROCEDURE	4
3.1 Precautions	4
3.2 Controls	5
3.3 FAILSAFE Adjustment	5
3.4 Setting the Dial Temperature Indicator	6
4 PROGRAMMING	7
5 WARRANTY	8

ILLUSTRATIONS

Figure		Page
1	Temperature Set Dial	6
-	Trouble Shooting: Electrical	9
2	Operating Instructions	10
3	Chamber Air Flow Pattern	11
4	CO_2 - LN_2 Valve Removal	12
5	Temperature Control System	13

1 CHAMBER & CONTROLLER DESCRIPTION

1.1 Chamber

1.1.1 The Model 2850 is a precision environmental temperature test chamber having a stainless steel interior, aluminum outer case and fiberglas insulation. The air circulation is closed and provided by a 140 CFM blower. The chamber is heated by applying full wave power to bobbin wound nichrome heating elements via the heat switch.

1.1.2 The chamber is cooled by injecting liquid CO_2 (liquid nitrogen in the LN_2 models) into the air stream through an expansion nozzle. The coolant flow is metered by a solenoid valve, controlled by a solid state switch.

The temperature control system is shown in block diagram form in Figure 5.

1.2. Solid State Controller

1.2 1 The controller compares the resistance of the temperature probe to the resistance of the TEMPERATURE SET potentiometer. (The resistance of a remote programming resistor is compared to the probe resistance if the MODE switch is in the program position).

1.2.2 The resistance of the probe will always be either less than, equal to or greater than the resistance of the TEMPERATURE SET potentiometer (program resistance). These three situations directly correspond to the chamber temperature being lower than, equal to, or higher than desired. The controller applies heat, coolant, or withholds both to obtain and maintain the selected temperature in the chamber.

1.2.3 Mode - The controller is a three mode unit, i.e.,

a) Heat only
b) No heat or coolant
c) Coolant only

This mode of control insures that LCO_2 or LN_2 is not wasted in a continuous cycling of the heaters and coolant valve such as would be the case for a simple two state output controller.

1.2.4 Further information on the controller may be found in the complete Type III Controller Manual included as part of this information package.

1.3 Null Detector Circuit

1.3.1 A contact closure is provided at the rear which functions when the chamber reaches the indicated set point of the controller. This contact closure may be used to signal external equipment that the chamber has reached selected temperature.

1.3.2 The Delta Design Model 9308 HI-LO Programmer, Model 9311 TEN STEP Programmer, and the Model 9313 HI-LO-AMBIENT Programmer utilize the null contacts to start their timers when they are used with the chamber. This contact closure feature is most useful in automatic test programming applications.

2 INITIAL SETUP

2.1 Electrical Connection - Power connection should be an AC power source rated at 125V - 20 amps - 50/60 Hz or 240V - 15 amps - 50/60 Hz (240V option). THE CHAMBER MUST BE CONNECTED TO EARTH GROUND (GREEN WIRE).

2.2 Liquid Coolant - Liquid Carbon Dioxide (LCO_2) - 1050 psi system (standard). Optional systems are LCO_2 - 300 psi, and Liquid Nitrogen (LN_2) - 100 psi.

2.2.1 Liquid Carbon Dioxide - 1050 psi system. A siphon type liquid CO_2 bottle is recommended.

2.2.1.1 Test the bottle by releasing a small amount of LCO_2 into a white handkerchief. Any brown stain indicates rust which would clog the filter and valve in the chamber. A wet handkerchief indicates water which would either freeze in the valve or clog the injector nozzle. Crack the LCO_2 valve open on the cylinder and notice the spray. It should be a dense, white cloud. It looks thin and gray when the tank is almost empty. An almost empty tank will not give proper cooling and should not be used. Connect the tank of LCO_2 to the rear of the chamber with the supplied high-pressure hose and fittings. Place a small amount of sealing compound on the threads of the male fitting to prevent leakage. DO NOT LET ANY SEALING COMPOUND GET INTO THE VALVE INLET ON THE REAR OF THE CHAMBER. Open the bottle and check for leaks which show as frosty spots on the hose or fittings.

2.2.2 Liquid Carbon Dioxide - 300 psi Low Pressure system.

2.2.2.1 When the in-plant use of liquid CO_2 exceeds approximately 1000 to 2000 pounds per month, a bulk liquid storage system can be installed to reduce the cost of coolant.

Chambers being operated with this type of system have to be fitted with a different CO_2 valve and injector than used on a 1050 psi system. Contact Delta for information concerning valve replacement. If new chambers are ordered for use with a bulk storage 300 psi system, the fact should be stated on the order.

> NOTE: The bulk storage system should be of the recirculating type if possible. If not, the supply should be located as close as possible to the chamber to minimize gas formation in the supply line. This is particularly important in low volume usage systems as the insulation and fluid flow are the factors that prevent boiling of CO_2 in the supply line. Gaseous CO_2 is not an effective coolant.

2.2.2.2 All lines, valves and connecting hoses should be blown out before the chamber is connected. Water is very troublesome and is apparently inherent in some low-pressure refrigerated supplies. If lines are opened to bleed off excessive pressure at shutdown, close them to prevent contamination by condensed moisture. This will help to keep ice from forming in the control valve.

2.3 Liquid Nitrogen

CAUTION

> Oxygen in the air surrounding the chamber inner liner and in the insulation can be liquified at low temperatures. This creates an oxygen rich atmosphere surrounding the heater area. The chamber tends to be self purging as the nitrogen replaces the usual atmosphere near the heaters. Any mixture of oil and liquid oxygen can be explosive so that extreme care must be used during operation at very low temperatures.

2.3.1 A 100 psi valve and stainless steel injector assembly is used for the liquid nitrogen applications. LCO_2 from a tank will not operate properly in a chamber equipped for LN_2.

2.3.2 Connect a liquid nitrogen liquid withdrawal container to the LN_2 input of the chamber with an insulated transfer line. A relief valve should be installed in the line with a relief pressure between 60 and 100 psi for a 2700 cubic foot 50 psi liquid withdrawal container.

3 STARTING UP PROCEDURE

3.1 Precautions

3.1.1 Connect SAFETY PLUG (rear of chamber) when external programmer is not being used. This will preclude any accidental high temperature being obtained if the MODE switch is placed in the PROGRAM position with no programmer connected.

3.1.2 Unplug the chamber from all sources of power before attempting any type of servicing or removal of the controller chassis. The case of the triac switch assembly, located on the controller sub-assembly, is at power line potential and extreme care in servicing or calibration must be exercised.

3.1.3 Insure that the correct type of LCO_2 (liquid carbon dioxide) source is connected to the chamber before operating at low temperature. Recommend standard 50 pound capacity high dry siphon LCO_2 supply. Test the LCO_2 for cleanliness by discharging a quantity of it through a clean white handkerchief. Bits of rust and traces of oil, ice or water indicate contaminated LCO_2 which should not be used.

3.1.4 Ground the case of the chamber to earth ground. When a grounded outlet is not available, use the three-to-two adapter (supplied with the chamber) and connect the green colored "pigtail" to earth ground. The chamber must not be operated without the case grounded.

3.1.5 Operate the chamber at a temperature of 200°C for an hour after prolonged operation at low temperatures. This restores the efficienty of the insulating material by driving out the moisture which has been condensed out of the air.

CAUTION

Liquid oxygen may be formed in the insulation when the chamber is operated at low temperatures. Any mixture of oil and liquid oxygen can be explosive. If oil contamination is suspected, bake the chamber out by operating it at a temperature of 200°C for a period of 3 hours before taking it to extremely low temperatures.

3.1.6 Do not leave liquid nitrogen trapped in a line (valves closed at both ends) as high pressures will be developed as the liquid absorbs heat and becomes gas.

3.2 Controls - See Figure 2.

3.3 Adjusting the Failsafe

3.3.1 To adjust the FAILSAFE high temperature protection unit, rotate the slotted FAILSAFE control. The trip temperature is increased by rotating the control counterclockwise and is lowered by turning the control clockwise. The FAILSAFE setting is preset at the factory at +315°C (maximum rating of standard chamber). If it is desirable to change the setting to a lower temperature setting, operate the chamber at the maximum temperature desired. Adjust the FAILSAFE until it is on the verge of tripping.

CAUTION

Do not rotate the FAILSAFE setting more than one full turn lower than the trip point, as this can damage the unit.

3.4 Setting the Dial Temperature Indicator

3.4.1 Refer to example A - Set both dials at zero.

3.4.2 One complete rotation of the knob equals 100°. Clockwise is plus (+) degrees (F. or C) and counter-clockwise is minus (-) degrees. Each rotation of the knob is indicated by the small dial nearest the knob.

3.4.3 The large dial indicates each degree, every tenth numbered. Thus, as in example B, the large dial is set at 15, and the small dial is beyond 3, therefore the setting is +315°.

3.4.4 When setting to a minus (-) temperature it is necessary to subtract the degrees from 100, i.e., 20 from 100 equals "80" reading on the large dial to have a setting of -20°. This is shown in example C. It will be noted that the zero on the small dial is just to the left of the marker. Also, on the models having a range greater than -100°, it is necessary to keep track of the counter-clockwise rotation of the knob.

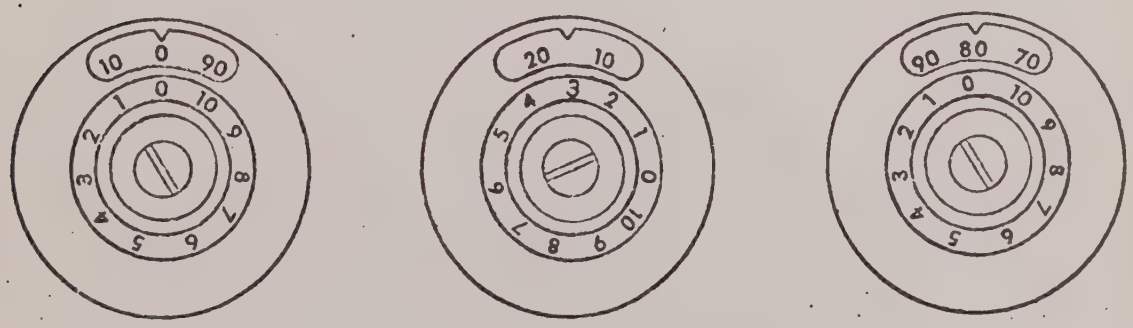

A
(0°)

B
(+315°)

C
(-20°)

FIGURE 1
TEMPERATURE SET DIAL

4 PROGRAMMING

4.1 Connect the correct resistances between pins 1 and 3 of the PROGRAM jack. Set the MODE switch to PROGRAM and the HEAT AND COOL switches to their ON positions. The controller will apply heat or coolant as needed to obtain the programmed temperature.

4.2 A safety plug is provided with the chamber and should be kept connected to the PROGRAM input whenever an actual programmer or actual resistance is not connected. The safety plug will prevent the chamber from accidentally being programmed to a very high temperature if the MODE switch is placed in the PROGRAM position with an open PROGRAM input.

4.3 The safety plug disables the heat and cool circuits of the controller when the MODE switch is placed in the PROGRAM position.

5 WARRANTY

Delta Design, Inc. guarantees all products manufactured and sold by it to conform to published specifications and against defective material and workmanship for a period of 90 days from the date of our shipment. Temperature chambers and electronics are warranted for one year from date of shipment. All contactor assemblies are warranted for a period of 90 days or 1/2 million cycles. Obligation under these warranties is limited to repair or replacement by Delta at its plant or one of its authorized service stations, on any of our products which Delta determines to be defective or not in accord with stated specifications. Delta will not accept responsibility for any defect caused by improper use, nor will Delta assume liability for any unauthorized repairs or modifications to its products or materials, even though defective or not in accord with the specifications. In no case will responsibility extend to products, materials, or equipment not manufactured by Delta. All products to be returned to Delta's plant for warranty repair must have prior written approval from Delta Design, Inc., and all return transportation charges will be at the buyer's expense. Delta will not accept liability for any unauthorized returns. No liability will be accepted for any damages to customer's materials, and equipment due to the use or misuse of Delta's products, nor for any loss of profits or other special damages. Delat Design, Inc., reserves the right to change price, design features and/or specifications without notice.

TROUBLE SHOOTING: ELECTRICAL

HOW TO USE THIS CHART

1. Turn Mode Switch to Manual.
2. Note Thermometer Reading (Chamber Temperature)
3. Turn Heat and Cool Switches On.
4. Turn Temperature Set Control 50° Higher than Chamber Temperature and note the conditions of the Heat and Cool Lamps.
5. Turn Temperature Set Control 50° Lower than Chamber Temperature and note the conditions of the Heat and Cool Lamps.

These two situations determine the correct block to read in the chart:

6. Enter the Chart at the Top for the conditions observed in step 4. (50° Higher than Chamber Temperature.)
7. Enter the Chart at the Left Side for the conditions observed in step 5. (50° Lower than Chamber Temperature.)

	LIGHT STATE WITH TEMPERATURE SET DIAL 50° HIGHER THAN CHAMBER TEMP.				
LIGHT STATE WITH TEMPERATURE SET DIAL 50° LOWER THAN CHAMBER TEMP.		RED - OFF GREEN - OFF	RED - ON GREEN - OFF	RED - OFF GREEN - ON	RED - ON GREEN - ON
	RED - OFF GREEN - OFF	Probe Element shorted to case. (Replace) Failure on Amplifier P.C. Board. (Trace signal with scope) Transformer Winding open.	Cool Circuit has failed. Trace signals with scope.		
	RED - ON GREEN - OFF		Probe shorted out. Temp. set Pot. — open. Cool Anticipator winding open. Check between Terminal A and Case of Q8 for 10Ω.		
	RED - OFF GREEN - ON	Failsafe Relay K1 not energizing. Coil resistance will be Approx. 10K. Failsafe open. Heat Triac failed.	NORMAL	Probe Open. Temp. Set. Pot. shorted. Heat Anticipator Winding open: Check between B and Case of Q9 for 10Ω.	Cool Circuit has failed — Trace signal with scope.
	RED - ON GREEN - ON		Heat circuit has failed — Trace signal with scope.Triac failed.		

FAILSAFE ADJUST - LOCATED ON FRONT OF CHAMBER
TURN TO CHANGE TEMPERATURE AT WHICH FAILSAFE WILL TRIP
CAUTION: DO NOT LOWER FAILSAFE TEMP. SETTING UNLESS HEAT SW. IS ON & FAILSAFE IS OFF.

FAILSAFE LAMP - GLOWS RED WHEN FAILSAFE IS TRIPPED

(5) HEAT SWITCH & LIGHT -- SWITCH ON -- ON POSITION ALLOWS CONTROLLER TO APPLY HEAT AUTOMATICALLY TO MAINTAIN SELECTED TEMPERATURE IN CHAMBER RED LIGHT IS ON STEADY WHEN CHAMBER IS HEATING, BLINKS WHEN CHAMBER REACHES SELECTED TEMPERATURE ABOVE AMBIENT

(4) COOL SWITCH & LIGHT -- SWITCH ON -- ON POSITION ALLOWS CONTROLLER TO APPLY COOLANT AUTOMATICALLY TO MAINTAIN SELECTED TEMPERATURE IN CHAMBER GREEN LIGHT IS ON STEADY WHEN CHAMBER IS COOLING.

(3) POWER SWITCH & LIGHT -- SWITCH ON MAIN POWER ON. WHITE LIGHT GLOWS WHEN POWER IS ON.

(2) TEMPERATURE SET DIAL -- SET TO DESIRED TEMPERATURE. SELECTS CHAMBER TEMPERATURE IF MODE SWITCH IS IN MANUAL POSITION.

(1) MODE SWITCH -- SET TO MANUAL POSITION. ASSIGNS THE SELECTION OF CHAMBER TEMPERATURE TO TEMPERATURE SET DIAL OR EXTERNAL PROGRAMMER.

MANUAL POSITION: TEMPERATURE SET DIAL DETERMINES CHAMBER TEMPERATURE.

PROGRAM POSITION: PROGRAMMING RESISTANCE CONNECTED TO PROGRAM JACK AT REAR OF UNIT SELECTS CHAMBER TEMPERATURE

CAUTION: ALWAYS CONNECT SAFETY PLUG (AT REAR OF CHAMBER) WHEN AN EXTERNAL PROGRAMMER IS NOT BEING USED

THERMOMETER - INDICATES CHAMBER TEMP. IN TEST VOLUME.

OPERATING INSTRUCTIONS:

A. INSTALL THE CHAMBER, CONNECT POWER CORD TO SUITABLE OUTLET & COOLANT SUPPLY TO VALVE INLET.

B. FOLLOW STEPS 1 THRU 5.

OPERATING INSTRUCTIONS
FIGURE 2

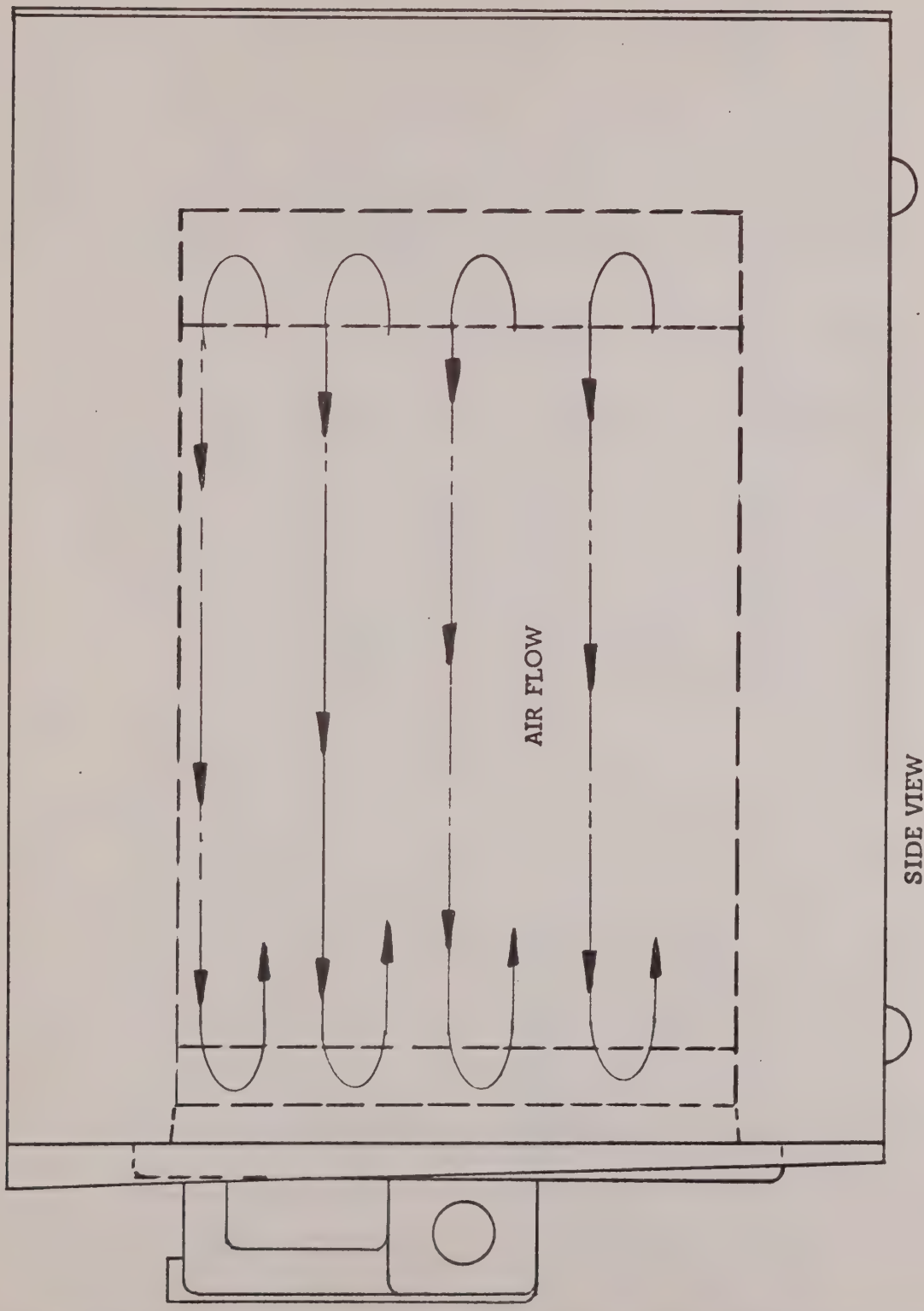

FIGURE 3

CHAMBER AIR FLOW PATTERN

TO REMOVE CO_2 VALVE

1. UNPLUG CHAMBER POWER CORD
2. REMOVE SIDE PANEL
3. REMOVE WIRES FROM TB2
4. REMOVE MOUNTING SCREWS (A) SEE CO_2 VALVE REMOVAL CHART
5. PULL CO_2 VALVE STRAIGHT OUT
6. AVOID BENDING OR DAMAGE TO INJECTOR STEM.

TO REMOVE HEATERS

1. UNPLUG CHAMBER POWER CORD
2. REMOVE SCREWS FROM REAR COVER
3. UNPACK FIBERGLAS
4. DISCONNECT HEATER WIRES
5. REMOVE (6) SCREWS, M, N, O, P, Q, R
6. PULL OUT HEATER ASSY.

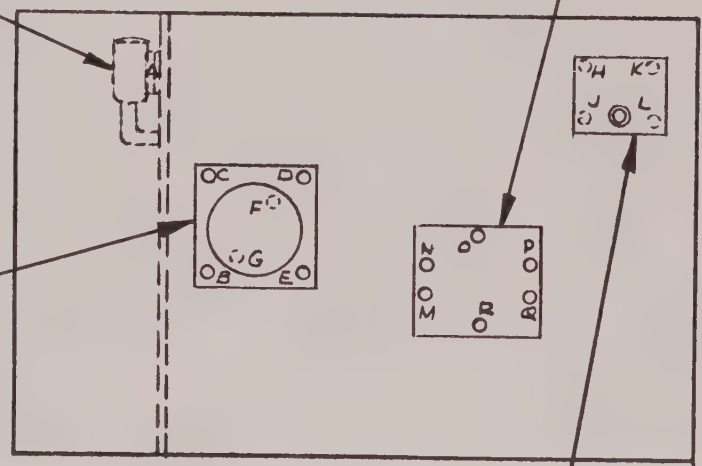

TO REMOVE BLOWERS

1. UNPLUG CHAMBER POWER CORD.
2. REMOVE 4 SCREWS B, C, D, E & REMOVE GRILL
3. REMOVE (2) WIRE NUTS
4. REMOVE (2) #10 SCREWS AT F & G.
5. PULL MOTOR STRAIGHT OUT

TO REMOVE LN_2 VALVE WHEN USED

1. UNPLUG CHAMBER POWER CORD
2. REMOVE (4) SCREWS AT H, J, K, L
3. PULL LN_2 PACKAGE DIRECTLY TO REAR TO CLEAR LN_2 INJECTOR TUBE.
4. REMOVE WIRE NUTS.

FIGURE 4
CO_2 - LN_2 VALVE REMOVAL

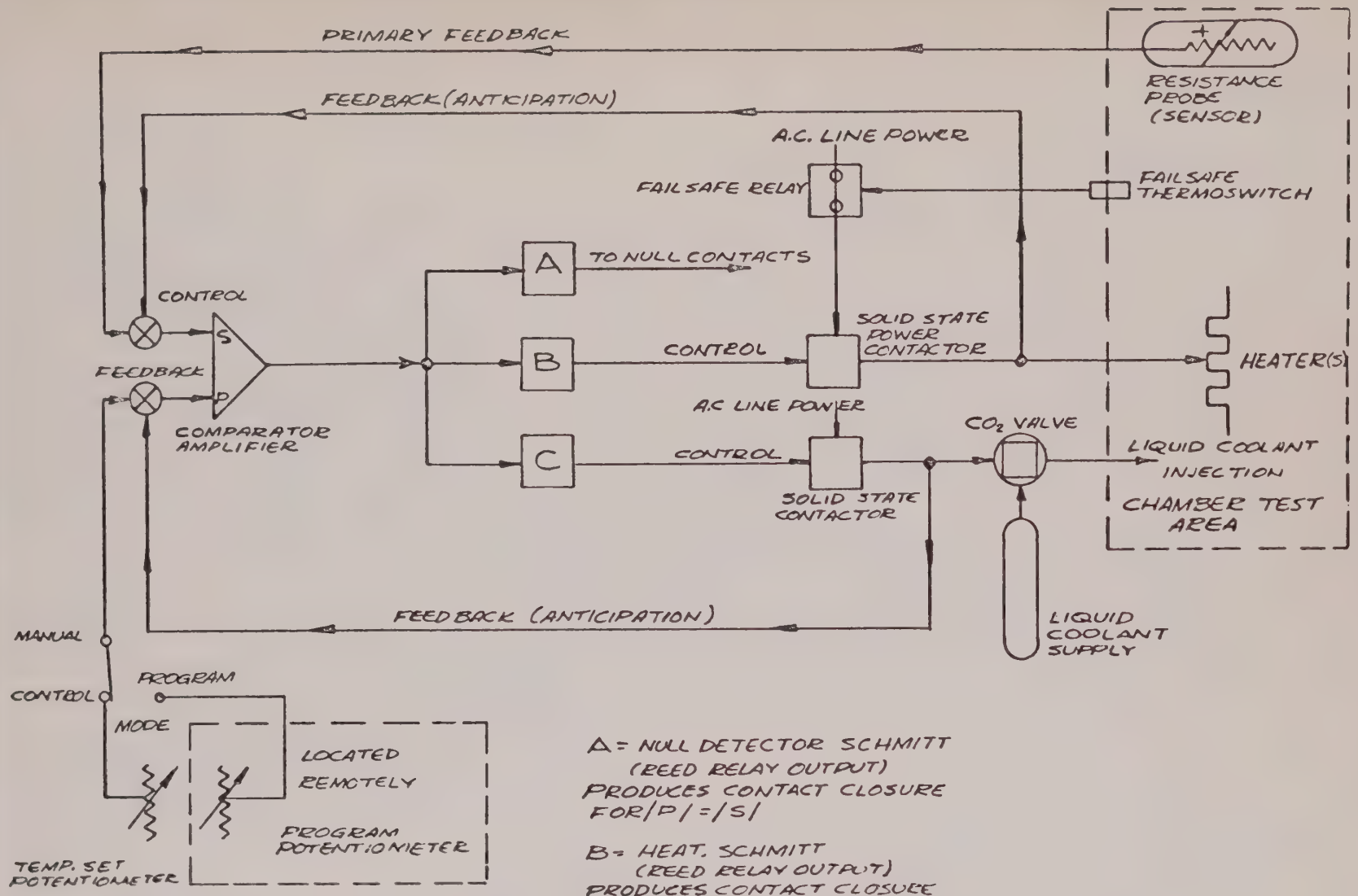

A = NULL DETECTOR SCHMITT
(REED RELAY OUTPUT)
PRODUCES CONTACT CLOSURE
FOR /P/ = /S/

B = HEAT. SCHMITT
(REED RELAY OUTPUT)
PRODUCES CONTACT CLOSURE
FOR /P/ INPUT AT AMPLIFIER
GREATER THAN /S/

C = COOL. SCHMITT
(REED RELAY OUTPUT)
PRODUCES CONTACT CLOSURE
FOR /S/ GREATER THAN /P/

TEMPERATURE CONTROL SYSTEM
SOLID STATE, TYPE III
DELTA DESIGN INC.

FIGURE 5

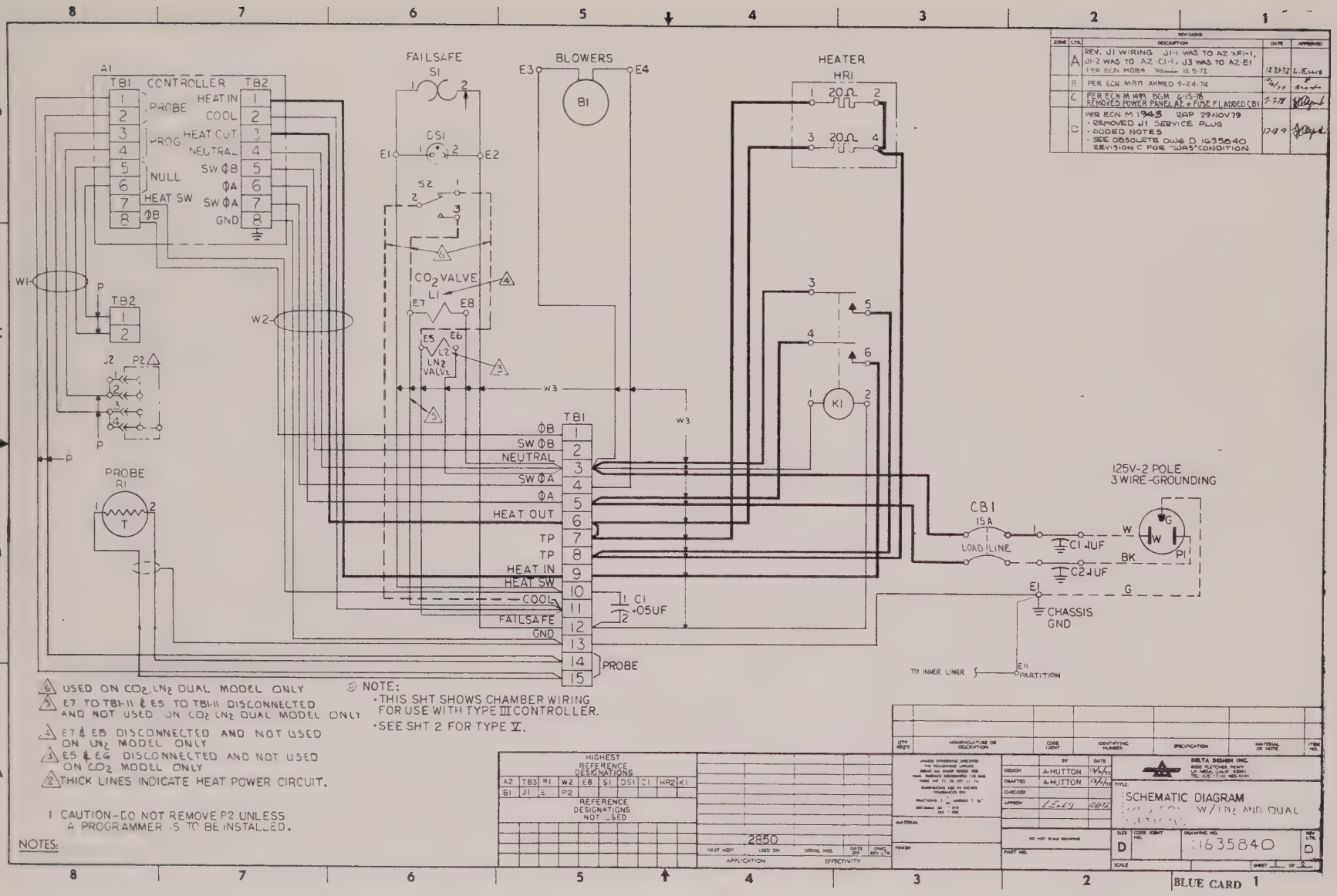

ZONE	LTR.	DESCRIPTION	DATE	APPROVED
	A	REV. J1 WIRING J1-1 WAS TO A2 XF1-1, J1-2 WAS TO A2-C1-1, J3 WAS TO A2-E1 PER ECN M084 Harris 12-5-72	12-21-72	L. Ellis
	B	PER ECN M871 AHMED 9-24-74	10/16/74	[illegible]
	C	PER ECN M 1499 BGM 6-15-78 REMOVED POWER PANEL A2 + FUSE F1, ADDED CB1	7-27-78	[illegible]
	D	PER ECN M 1945 RAP 29NOV79 · REMOVED J1 SERVICE PLUG · ADDED NOTES · SEE OBSOLETE DWG D 1635840 REVISION C FOR "WAS" CONDITION	12-18-79	[illegible]

6 USED ON CO_2, LN_2 DUAL MODEL ONLY

5 E7 TO TB1-11 & E5 TO TB1-11 DISCONNECTED AND NOT USED ON CO_2 LN_2 DUAL MODEL ONLY

4 E7 & E8 DISCONNECTED AND NOT USED ON LN_2 MODEL ONLY

3 E5 & E6 DISCONNECTED AND NOT USED ON CO_2 MODEL ONLY

2 THICK LINES INDICATE HEAT POWER CIRCUIT.

1 CAUTION-DO NOT REMOVE P2 UNLESS A PROGRAMMER IS TO BE INSTALLED.

NOTES:

D NOTE:
- THIS SHT SHOWS CHAMBER WIRING FOR USE WITH TYPE III CONTROLLER.
- SEE SHT 2 FOR TYPE V.

HIGHEST REFERENCE DESIGNATIONS

A2	TB3	R1	W2	E8	S1	DS1	C1	HR2	K1
B1	J1	E	P2						

REFERENCE DESIGNATIONS NOT USED

QTY REQ'D	NOMENCLATURE OR DESCRIPTION	CODE IDENT	IDENTIFYING NUMBER	SPECIFICATION	MATERIAL OR NOTE	ITEM NO.

	BY	DATE
DESIGN	A. HUTTON	12/6/71
DRAFTED	A. HUTTON	12/7/71
CHECKED		
APPROV	L. Ellis	12-4-72

DELTA DESIGN INC.
8000 FLETCHER PKWY
LA MESA, CALIF 92041
TEL A/C 17141 465-6141

TITLE: SCHEMATIC DIAGRAM
[illegible] W/ LN_2 AND DUAL [illegible]

SIZE D | CODE IDENT NO. | DRAWING NO. 1635840 | REV LTR. D

SCALE | SHEET 1 OF 2

2850
NEXT ASSY | USED ON | SERIAL NOS. | DATE EFF | DWG REV LTR
APPLICATION | EFFECTIVITY

MATERIAL
FINISH
PART NO.
NO HOT SCALE DRAWING

BLUE CARD 1

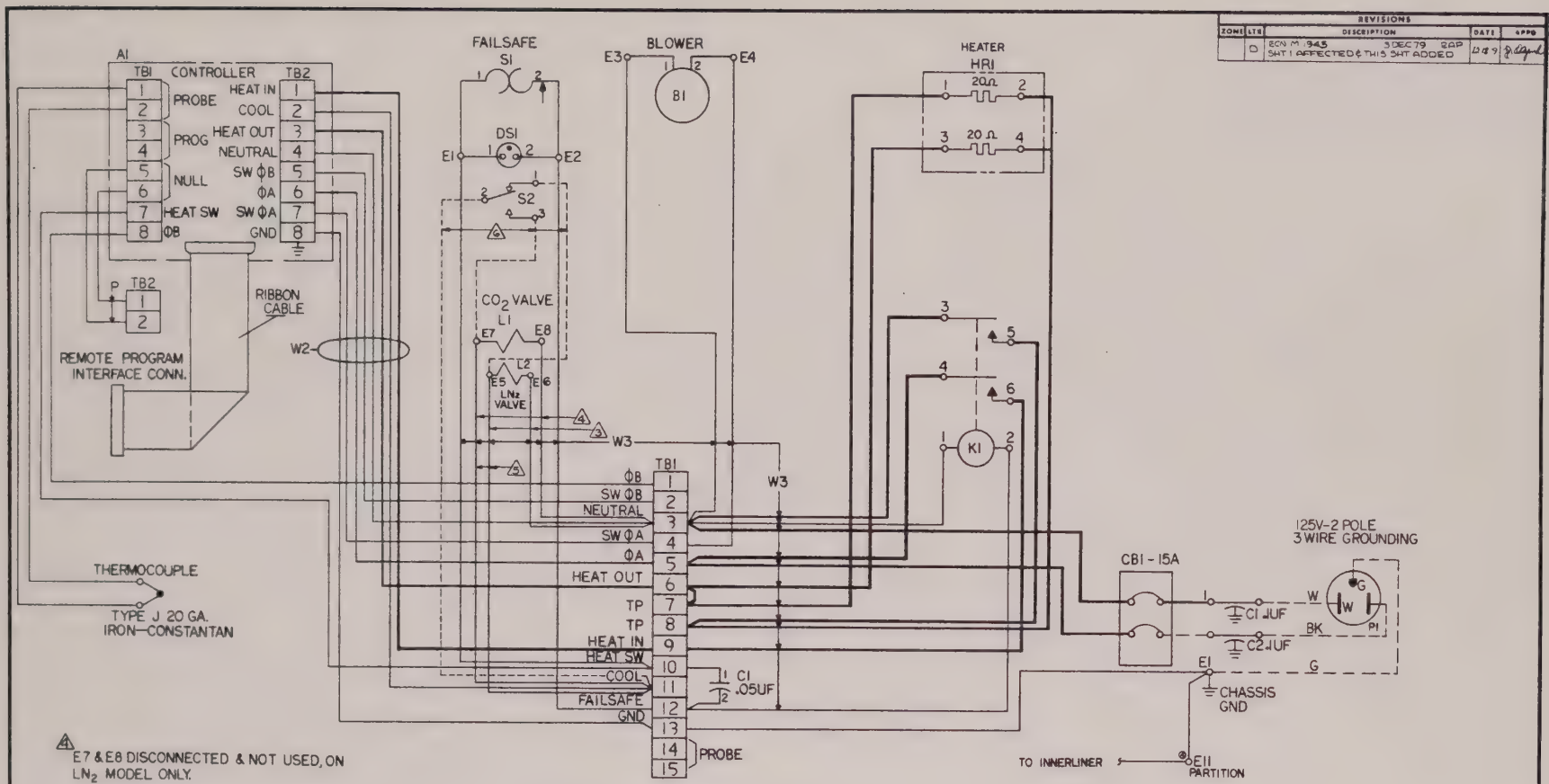

REVISIONS				
ZONE	LTR	DESCRIPTION	DATE	APPD
	D	ECN M 1945 3DEC79 RAP SHT 1 AFFECTED & THIS SHT ADDED	12 4 9	

4 E7 & E8 DISCONNECTED & NOT USED, ON LN_2 MODEL ONLY.

3 E5 & E6 DISCONNECTED & NOT USED, ON CO_2 MODEL ONLY.

2. THICK LINES INDICATES HEAT POWER CIRCUITRY.

1.

NOTE:
- THIS SHT SHOWS CHAMBER WIRING FOR USE WITH TYPE V CONTROLLER.
- SEE SHT 1 FOR TYPE III

6 USED ON CO_2-LN_2 DUAL MODEL ONLY.

5 E7 TO TB1-11 & E5 TO TB1-11 DISCONNECTED & NOT USED, ON CO_2-LN_2 DUAL MODEL ONLY.

NOTES: UNLESS OTHERWISE SPECIFIED

		2635402	2850				
SALES QTY	NEXT ASSY	USED ON	SERIAL NO.	DATE EFF	CHANGE NOTICE	MATERIAL 1	
APPLICATION			EFFECTIVITY			FINISH 2	

ENGINEERING ACTIVITY

DESIGN	
DRAFTED	3DEC79 RAP
CHECKED	
APPROV	
RELEASE	

DO NOT SCALE DWG

DELTA DESIGN INC.
A SUBSIDIARY OF CONV INC.
SAN DIEGO, CA. 92123

TITLE: SCHEMATIC DIAGRAM 125V 2POLE 3WIRE GROUNDING

SIZE D | CODE IDENT | 1635840

SCALE —— | SHEET 2 OF 2

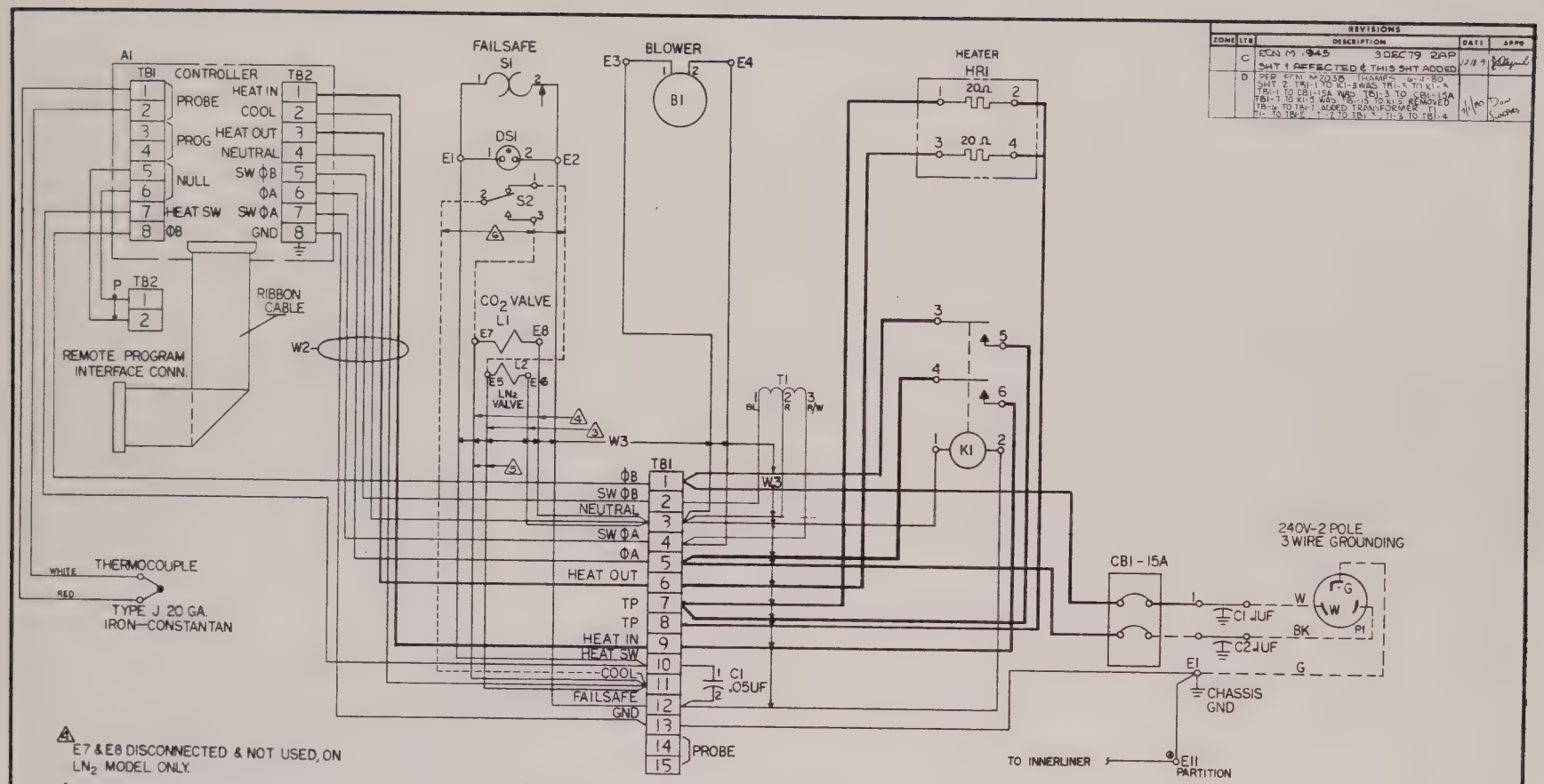

REVISIONS				
ZONE	LTR	DESCRIPTION	DATE	APPD
	C	ECN M 1945 3DEC79 2AP SHT 1 AFFECTED & THIS SHT ADDED	12/18/9	[illegible]
	D	PER ECN M2038 THAMES 6-4-80 SHT 2 TB1-1 TO K1-3 WAS TB1-3 TO K1-3 TB1-1 TO CB1-15A WAS TB1-3 TO CB1-15A TB1-7 TO K1-5 WAS TB1-5 TO K1-5 REMOVED TB-6 TO TB1-1 ADDED TRANSFORMER T1 T1-1 TO TB1-2 T1-2 TO TB1-3 T1-3 TO TB1-4	7/1/80	Don Sanders

4 E7 & E8 DISCONNECTED & NOT USED, ON LN_2 MODEL ONLY.

3 E5 & E6 DISCONNECTED & NOT USED, ON CO_2 MODEL ONLY.

2. THICK LINES INDICATE HEAT CIRCUITRY

1.

NOTE:
- THIS SHT SHOWS CHAMBER WIRING FOR USE WITH TYPE V CONTROLLER.
- SEE SHT 1 FOR TYPE III

6 USED ON CO_2-LN_2 DUAL MODEL ONLY.

5 E7 TO TB1-1 & E5 TO TB1-1 DISCONNECTED & NOT USED, ON CO_2—LN_2 DUAL MODEL ONLY.

NOTES: UNLESS OTHERWISE SPECIFIED

		2635402	2859				
MATERIAL	NEXT ASSY	USED ON	SERIAL NO.	DATE EFF	DWG REV	MATERIAL	
FINISH	APPLICATION		EFFECTIVITY			FINISH	

ENGINEERING ACTIVITY

DESIGN
DRAFTED 3DEC79 2AP
CHECKED
APPROV
RELEASE
DO NOT SCALE DWG

DELTA DESIGN INC.
A SUBSIDIARY OF CONN INC.
SAN DIEGO, CA. 92000

TITLE: SCHEMATIC DIAGRAM 240V WITH LN_2 & DUAL OPTIONS

SIZE D | CODE IDENT | 1635838

SCALE | SHEET 2 OF 2

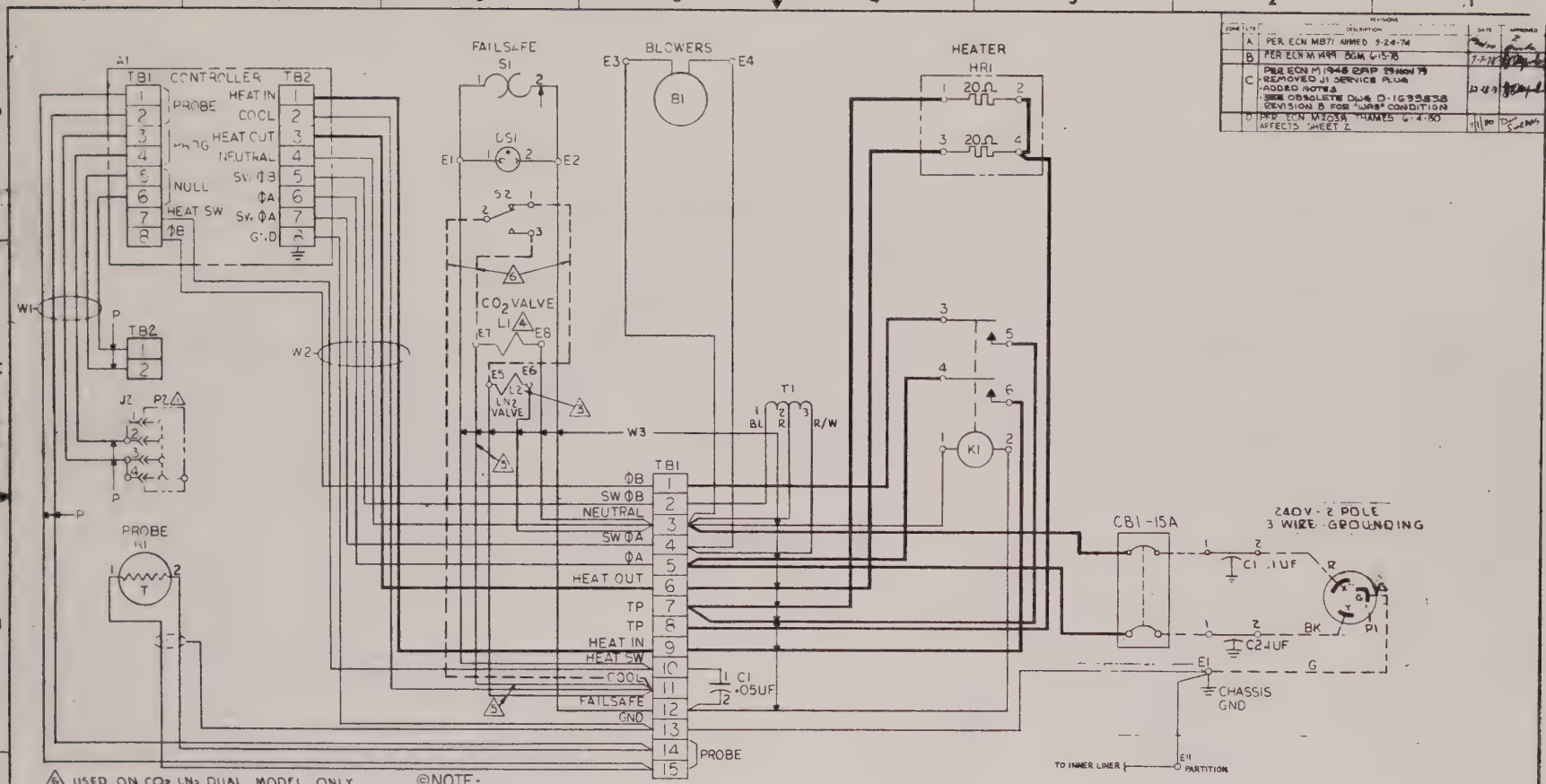

ZONE	LTR	DESCRIPTION	DATE	APPROVED
	A	PER ECN MB71 AMMED 9-24-74		
	B	PER ECN M1499 BGM 6-15-78	7-7-78	
	C	PER ECN M1948 RAP 29 NOV 79 REMOVED J1 SERVICE PLUG ADDED NOTES SEE OBSOLETE DWG D-1635838 REVISION B FOR "WAS" CONDITION	12-18-79	
	D	PER ECN M2038 THAMES 6-4-80 AFFECTS SHEET 2	7/1/80	

6 USED ON CO_2, LN_2 DUAL MODEL ONLY

5 E7 TO TB1-11 & E5 TO TB1-11 DISCONNECTED AND NOT USED ON CO_2 LN_2 DUAL MODEL ONLY

4 E7 & E8 DISCONNECTED AND NOT USED ON LN_2 MODEL ONLY

3 E5 & E6 DISCONNECTED AND NOT USED ON CO_2 MODEL ONLY

2. THICK LINES INDICATE HEAT POWER CIRCUIT.

1 CAUTION-DO NOT REMOVE P2 UNLESS A PROGRAMMER IS TO BE INSTALLED.

NOTES:

©NOTE:
- THIS SHT SHOWS CHAMBER WIRING FOR USE WITH TYPE III CONTROLLER.
- SEE SHT 2 FOR TYPE V.

HIGHEST REFERENCE DESIGNATIONS

A2	TB3	R1	W2	E8	S1	DS1	C1	HR2	K1
B1	J1	P2	E11						

REFERENCE DESIGNATIONS NOT USED

E5 E6

2850

NEXT ASSY | USED ON | SERIAL NOS | DATE EFF | DWG REV LTR

APPLICATION | EFFECTIVITY

QTY REQ'D | NOMENCLATURE OR DESCRIPTION | CODE IDENT | IDENTIFYING NUMBER | SPECIFICATION | MATERIAL OR NOTE | ITEM NO

DESIGN A. HUTTON 11/6/78
DRAFTED B. B
CHECKED
APPROV L. Fuss

DELTA DESIGN INC.
6000 FLETCHER PKWY
LA MESA, CALIF. 92041
TEL AC 1714 465 9141

TITLE
SCHEMATIC DIAGRAM
240V W/ LN_2 AND DUAL OPTIONS

SIZE D | CODE IDENT NO. | DRAWING NO. 1635838 | REV LTR D

SCALE | SHEET 1 OF 2

BLUE CARD 1

ZONE	LTR	REVISIONS DESCRIPTION	DATE	APPROVED
	A	PER ECN M1401 5-2-78 BGM REVISED NOTE 3	5-4-78	[signature]

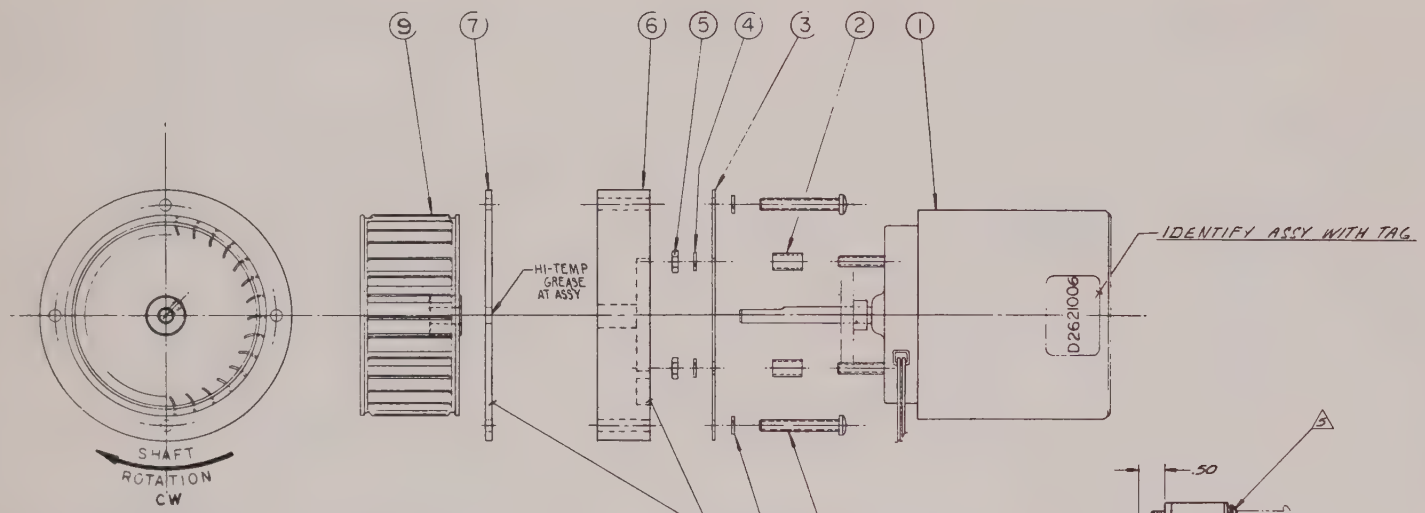

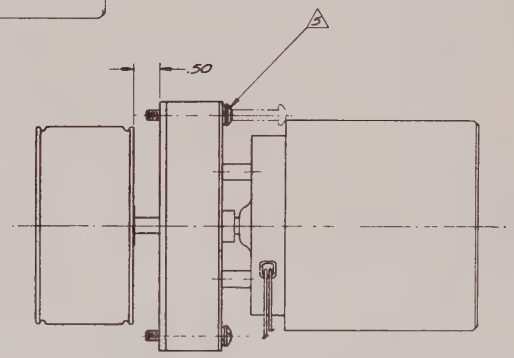

1.) MOTOR: 115 V. 50/60 Hz (NO THERMAL PROTECTION) SEALED BALL BEARING SHAFT ROTATION

2.) IMPELLER: REVCOR #Q381-187S (CCW ROTATION) ALTER PER B1632186

3.) RTV ITEM 7 TO ITEM 6; ATTACH ITEM 3 (MOTOR PLATE) TO ITEM 1 (MOTOR) USING HARDWARE, THEN RTV TO ITEM 6

4.) BLOWER MOTOR ASSY RATED AT 140 C.F.M. AIR MOVEMENT, NOM.

5 TAPE ITEMS 4 & 10 IN PLACE TO PREVENT BEING JARRED LOOSE BEFORE INSTALLING ON CHAMBER.

NOTES:

QTY REQ'D	NOMENCLATURE OR DESCRIPTION	CODE IDENT	IDENTIFYING NUMBER	SPECIFICATION	MATERIAL OR NOTE	ITEM NO

UNLESS OTHERWISE SPECIFIED DIMENSIONS ARE IN INCHES
TOLERANCES ON
FRACTIONS ± 1/64 DECIMALS .XX ± .010 .XXX ± .005 ANGLES ± 1/2°

MATERIAL:

FINISH:

	BY	DATE
DESIGN	L. ELLIS	8/3/70
DRAFTED	L. ELLIS	8/3/70
CHECKED	[signature]	9/30/70
APPROV		

DELTA DESIGN INC.
8000 FLETCHER PKWY
LA MESA, CALIF 92041
TEL A/C (714) 465-4141

TITLE: 50/60 Hz BLOWER MTR. ASSEMBLY CW SHAFT ROTATION

MODEL NO: STD PART
PART NO: 2621006

SIZE: D
CODE IDENT. NO.
DRAWING NO.: 2621006
REV LTR: A
SCALE: FULL
SHEET 1 OF 1

NEXT ASSY	USED ON	SERIAL NOS	DATE EFF	DWG. REV LTR
MULTI-USAGE	STD		2-3-70	N/C

APPLICATION EFFECTIVITY

BLUE CARD

REVISIONS				
ZONE	LTR.	DESCRIPTION	DATE	APPROVED
	A	PER ECN M683 RBrooks 5-28-74 ADDED BRACKET, PICTURE CHANGE ONLY	5-29-[illegible]	[illegible] 5-29-[illegible]

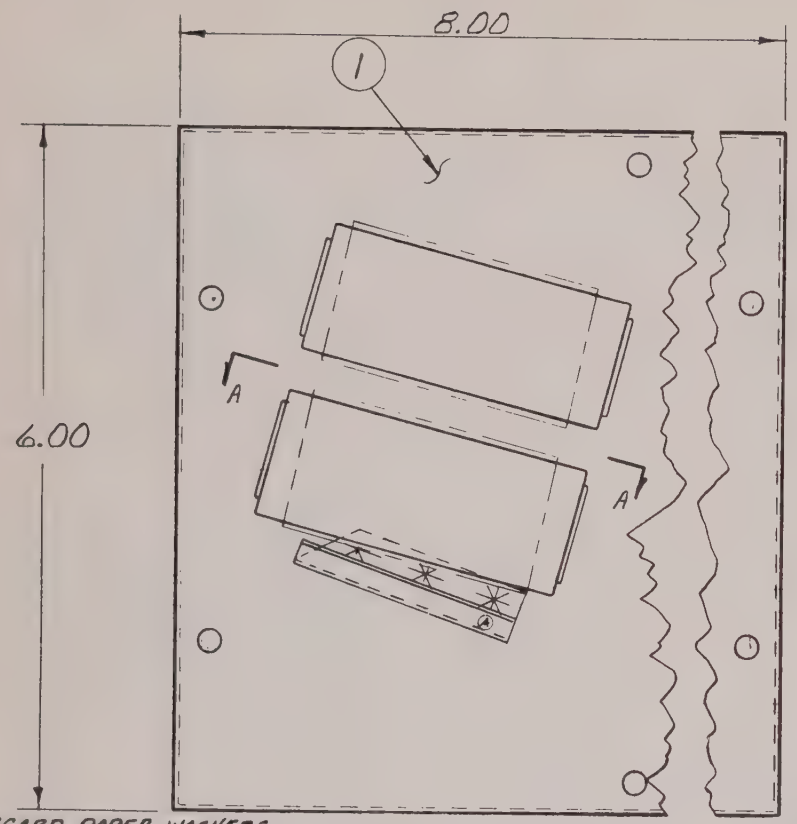

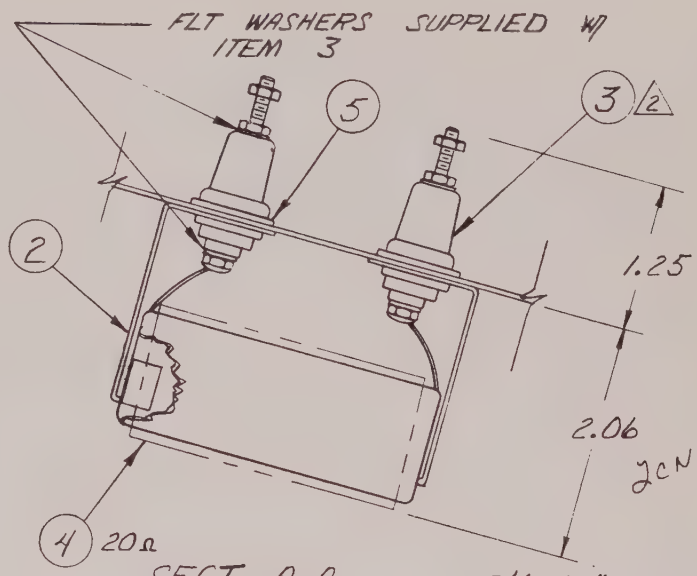

SECT. A-A

P/L "A" SIZE

2CN X 436 8-30-7

QTY. REQ'D	NOMENCLATURE OR DESCRIPTION	CODE IDENT.	IDENTIFYING NUMBER	SPECIFICATION	MATERIAL OR NOTE	ITEM NO

2 DISCARD PAPER WASHERS SUPPLIED WITH ITEM NO. 3. REPLACE WITH ITEM NO. 5.

1. ALL DIM. REF ONLY

NOTES:

UNLESS OTHERWISE SPECIFIED THE FOLLOWING APPLIES
BREAK ALL SHARP EDGES .005
MAX. SURFACE ROUGHNESS 125 RMS
THDS INT CL 2B, EXT CL 2A

NEXT ASSY	USED ON	SERIAL NOS	DATE EFF	DWG REV LTR.
2635402	2850			—
APPLICATION		EFFECTIVITY		

UNLESS OTHERWISE SPECIFIED DIMENSIONS ARE IN INCHES TOLERANCES ON
FRACTIONS ± 1/64 ANGLES ± 1/2°
DECIMALS .XX ± .010
.XXX ± .005

MATERIAL:

FINISH

	BY	DATE
DESIGN		
DRAFTED	KNAPP	5-2-72
CHECKED	Harris	7-6-72
APPROV.	L. ELLIS	7-6-72

DO NOT SCALE DRAWING

PART NO. 2635876

DELTA DESIGN INC.
8000 FLETCHER PKWY
LA MESA, CALIF 92041
TEL: A/C (714) 465-4141

TITLE: HEATER ASSY.

SIZE	CODE IDENT. NO.	DRAWING NO.	REV LTR
B		2622520	

SCALE FULL SHEET 1 OF 1

BLUE CARD

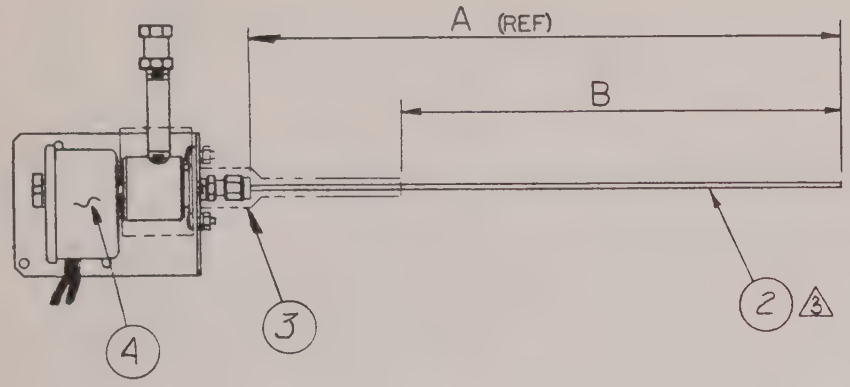

REVISIONS				
ZONE	LTR	DESRIPTION	DATE	APPD
	A	PER ECN M694 DTD 6-4-74 F.J.O. 4.75 DIM WAS 3.75		[illegible] 6-6-4
	B	PER ECN M747 R[illegible] 6-24-74 -001 "B" DIM WAS 4.75	7-8-4	[illegible]
	C	PER ECN M1012 OLEJNIK 6-11-75 -002 "A" DIM WAS 10.44 "B" DIM WAS 3.00	6/12/75	[illegible]
	D	PER ECN M1017 OLEJNIK 7-16-5	[illegible]	[illegible]
	E	PER ECN 1365 BGM 3-28-78 VALVE ASSY ITEM 4 UPDATED, SEE ECN — TABULATION BLOCK 4 50 WAS 3.00	4-13-78	[illegible]
	F	PER ECN M1521 BGM 7-20-78 INJECTOR ASSY ITEM 2 UPDATED, A+B DIMS CHANGED IN TABULATION BLOCK, SEE ECN	7-31-78	[illegible]

DASH NO	A	B	USED ON
-001	8.62	3.75	2300
-002	10.12	5.50	2850
-003	7.00	6.00	7650
-004	9.18	6.00	5900
-005	26.62	20.00	2850
-006			
-007			
-008			
-009			
-010			

3 INSERT ITEM 2, TUBE, ALL THE WAY TO VALVES INNER ORIFICE BEFORE TIGHTENING DOWN TUBE FITTINGS

2 FINISH (IF APPLICABLE)

1 MATL (IF APPLICABLE)

NOTES: UNLESS OTHERWISE SPECIFIED

DASH	QTY	NEXT ASSY	USED ON	SERIAL NO.	DATE EFF	DWG REV
		MULTIPLE		STD USAGE		
APPLICATION				EFFECTIVITY		

UNLESS OTHERWISE SPECIFIED DIMENSIONS ARE IN INCHES TOLERANCES ON
DECIMALS .XX ± .03 .XXX ± .010
ANGLES 0° 30'

HOLE TOLERANCES
.013 THRU .125 +.004 -.001
.251 THRU .500 +.004 -.001
.126 THRU .250 +.008 -.001
.501 THRU .750 +.008 -.001

MATERIAL 1
FINISH 2

ENGINEERING ACTIVITY

DESIGN	
DRAFTED	KNAPP 3-29-73
CHECKED	[illegible]
APPROV	[illegible] 4-6-73
RELEASE	

DO NOT SCALE DWG

DELTA DESIGN INC.
A SUBSIDIARY OF CONU INC.
5725 KEARNY VILLA RD SAN DIEGO, CA. 92123 - TEL (714) 292-5000

TITLE: CO_2 ASSY (900 PSI) SINGLE STEM

SIZE B | CODE IDENT | 2618016

SCALE 1/2 X | SHEET 1 OF 1

INITIAL RELEASE ECN M.

REVISIONS				
ZONE	LTR	DESCRIPTION	DATE	APPD
	B	PER ECN M1365 4-14-78 F.J.O.	4-14-78	[illegible]
	C	PER ECN M1521 BGM 7-21-78 INJECTOR ASSY. ITEM 2, UPDATED, A+B DIMS. CHANGED IN TABULATION BLOCK, SEE ECN	7-31-78	[illegible]

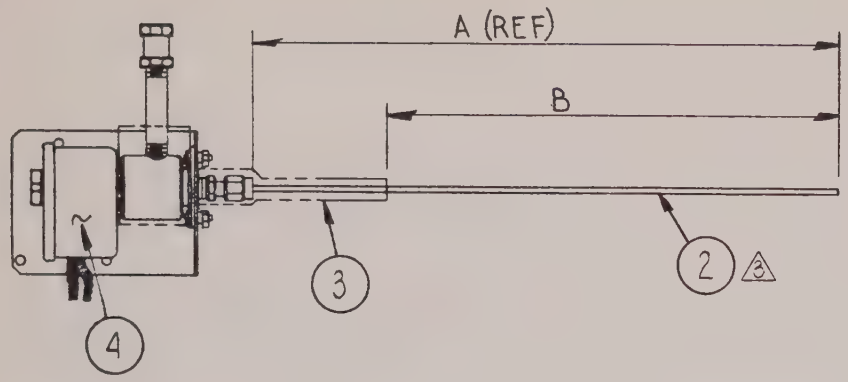

DASH NO	A	B	USED ON
-001	8.62	3.75	2300
-002	10.12	5.50	2850
-003	7.00	6.00	7650
-004	9.18	6.00	5900
-005	26.62	20.00	2850
-006			
-007			
-008			
-009			
-010			

3 INSERT ITEM 2, TUBE, ALL THE WAY TO VALVE'S INNER ORIFICE BEFORE TIGHTENING TUBE FITTINGS

4 FINISH (IF APPLICABLE)

4 MATL (IF APPLICABLE)

NOTES: UNLESS OTHERWISE SPECIFIED

DASH	QTY	NEXT ASSY	USED ON	SERIAL NO.	DATE EFF	DWG REV
		MULTI-STD USAGE				
APPLICATION				EFFECTIVITY		

UNLESS OTHERWISE SPECIFIED
DIMENSIONS ARE IN INCHES
TOLERANCES ON
DECIMALS: .XX ± .03, .XXX ± .010
ANGLES: 0° 30'

HOLE TOLERANCES
.012 THRU .125 +.004 −.001
.126 THRU .250 +.005 −.001
.251 THRU .500 +.006 −.001
.501 THRU .750 +.008 −.001

MATERIAL 1
FINISH 4

ENGINEERING ACTIVITY: ECN 1365

DESIGN	
DRAFTED	BGM 3-26-78
CHECKED	
APPROV	
RELEASE	

DO NO SCALE DWG

DELTA DESIGN INC.
A SUBSIDIARY OF COHU INC.
SAN DIEGO, CA. 92123

TITLE: CO_2 ASSY. (300 PSI) SINGLE STEM

SIZE: B
CODE IDENT:
2618015

SCALE 1/2
SHEET 1 OF 1

REVISIONS				
ZONE	LTR	DESCRIPTION	DATE	APPD

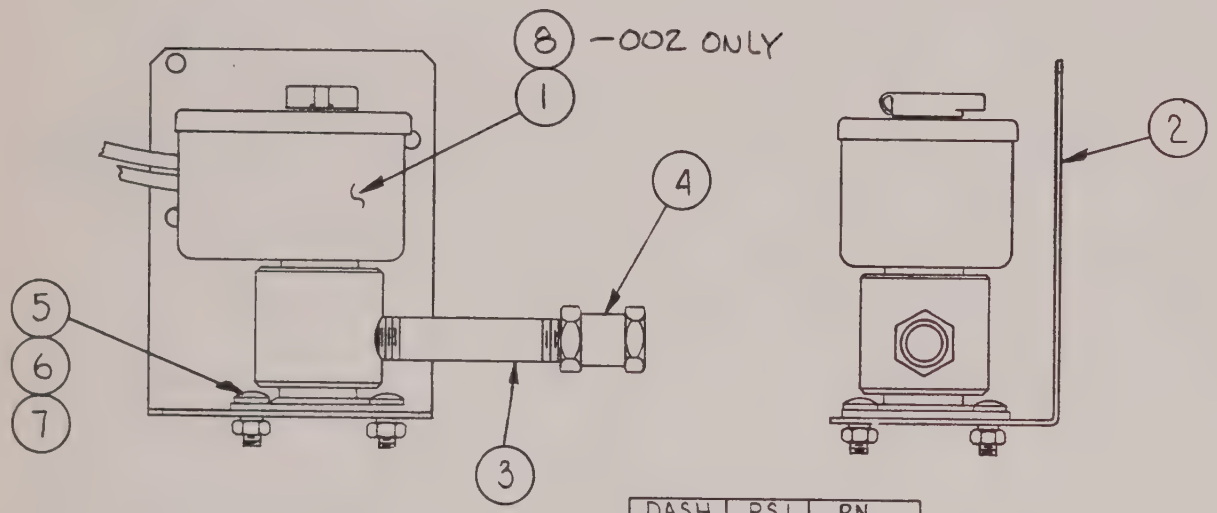

DASH	PSI	PN
-001	900	1800117
-002	300	1800105

DASH	QTY	NEXT ASSY	USED ON	SERIAL NO.	DATE EFF	DWG REV
		MULTI-USAGE				
APPLICATION				EFFECTIVITY		

UNLESS OTHERWISE SPECIFIED
DIMENSIONS ARE IN INCHES
TOLERANCES ON
DECIMALS: .XX ± .03; .XXX ± .010
ANGLES: 0° 30'

HOLE TOLERANCES
.013 THRU .125 +.004 −.001
.131 THRU .500 +.006 −.001
.126 THRU .330 +.006 −.001
.501 THRU .750 +.006 −.001

MATERIAL △1
FINISH △2

ENGINEERING ACTIVITY

DESIGN	
DRAFTED	BGM 3-24-78
CHECKED	
APPROV	
RELEASE	

DO NO SCALE DWG

DELTA DESIGN INC.
A SUBSIDIARY OF COHU INC.
SAN DIEGO, CA. 92123

TITLE: CO_2 VALVE + BRACKET ASS'Y

SIZE B | CODE IDENT | 1647407

SCALE 1/1 | SHEET 1 OF 1

△2 FINISH (IF APPLICABLE)

△1 MATL (IF APPLICABLE)

NOTES: UNLESS OTHERWISE SPECIFIED

REVISIONS				
ZONE	LTR	DESCRIPTION	DATE	APPD

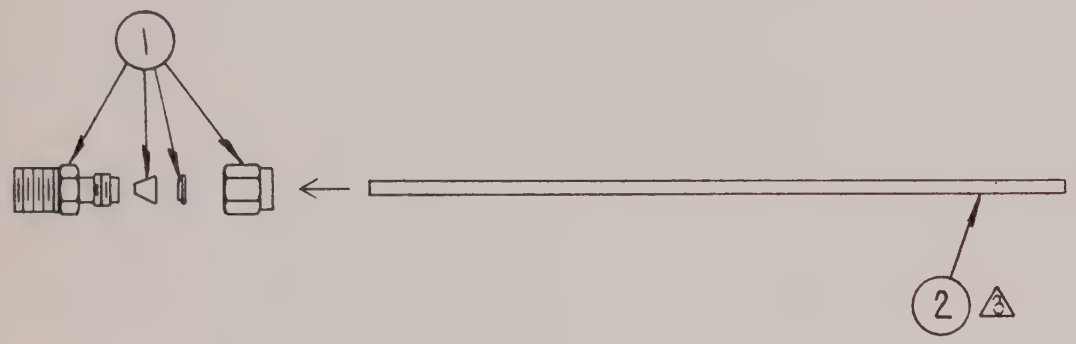

4) FOR INSTRUCTIONS ON HOW TO ASSEMBLE SEE NEXT ASSEMBLY

3 REMOVE ALL BURRS + SHARP EDGES, CLEAR I.D. OF ANY OBSTRUCTIONS

1 FINISH (IF APPLICABLE)

1 MATL (IF APPLICABLE)

NOTES: UNLESS OTHERWISE SPECIFIED

DASH	QTY	NEXT ASSY	USED ON	SERIAL NO.	DATE EFF	DWG REV
		2618016	-002			
		2618015	-001			

APPLICATION — EFFECTIVITY

UNLESS OTHERWISE SPECIFIED DIMENSIONS ARE IN INCHES TOLERANCES ON
DECIMALS .XX ± .03 .XXX ± .010
ANGLES 0° 30'

HOLE TOLERANCES
.072 THRU .123 +.006 −.001
.231 THRU .500 +.006 −.001
.370 THRU .530 +.006 −.001
.501 THRU .750 +.008 −.001

MATERIAL 1
FINISH 1

ENGINEERING ACTIVITY
ECN M1521

DESIGN	
DRAFTED	BGM 7-14-78
CHECKED	
APPROV	
RELEASE	

DO NO SCALE DWG

DELTA DESIGN INC.
A SUBSIDIARY OF COMU INC.
SAN DIEGO, CA. 92123

TITLE: INJECTOR ASSY, CO_2 SINGLE STEM

SIZE B | CODE IDENT | 1647840

SCALE NONE | SHEET 1 OF 1

BLUE CARD

REVISIONS				
ZONE	LTR	DESCRIPTION	DATE	APPD

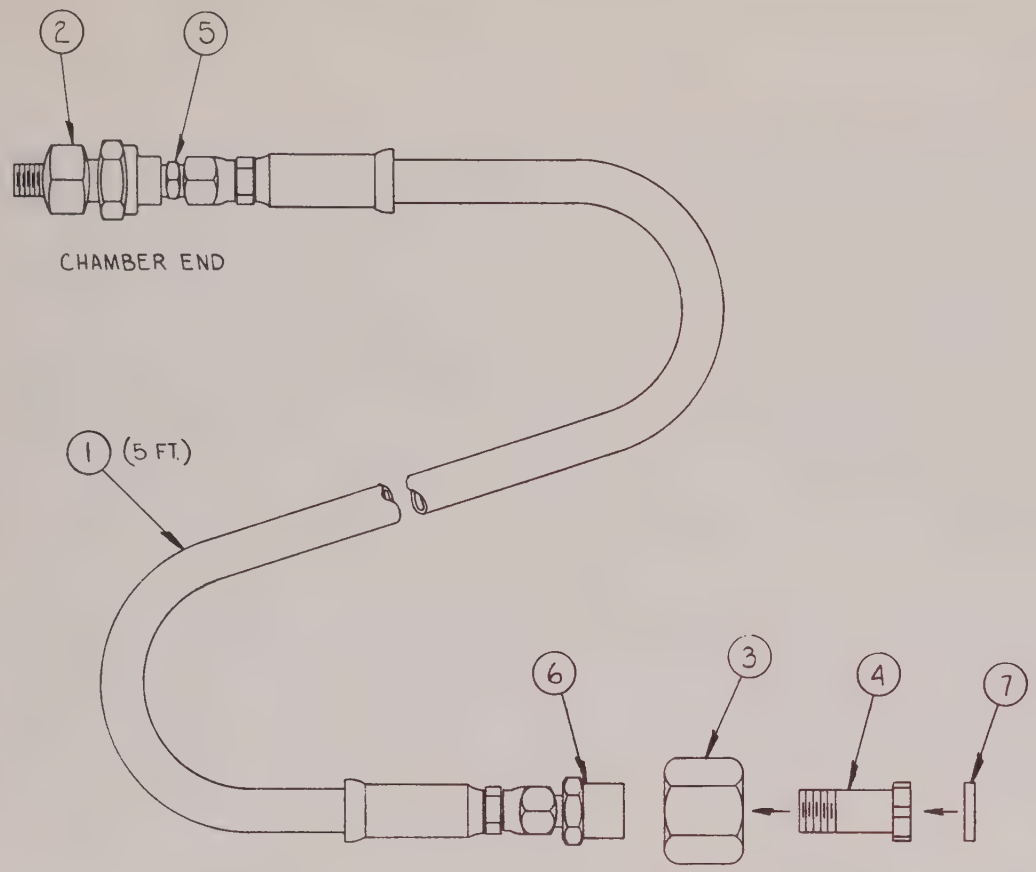

DASH	QTY	NEXT ASSY	USED ON	SERIAL NO.	DATE EFF	DWG REV
001	1	1640111	8000			
001	1		7650			
001	1	2636342	6400			
001	1	2635601	5900			
001	1	2636283	3900			
001	1	2635402	2850			
001	1	2605110	2300			
APPLICATION				EFFECTIVITY		

UNLESS OTHERWISE SPECIFIED
DIMENSIONS ARE IN INCHES
TOLERANCES ON
DECIMALS .XX ± .03 .XXX ± .010
ANGLES 0°30'

HOLE TOLERANCES
.012 THRU .125 +.006 −.001
.126 THRU .250 +.008 −.001
.251 THRU .500 +.006 −.001
.501 THRU .750 +.008 −.001

MATERIAL ⚠
FINISH ⚠

ENGINEERING ACTIVITY
ECN M1622

DESIGN	B MOLSEN 10-2-78
DRAFTED	
CHECKED	
APPROV	
RELEASE	

DO NOT SCALE DWG

DELTA DESIGN INC.
A SUBSIDIARY OF CONU INC.
SAN DIEGO, CA. 92123

TITLE: HOSE SHIP KIT

SIZE C | CODE IDENT | 2618020

SCALE 1/1 | SHEET 1 OF 1

⚠ FINISH (IF APPLICABLE)

⚠ MATL (IF APPLICABLE)

NOTES: UNLESS OTHERWISE SPECIFIED

BLUE CARD

INDEX OF ASSEMBLIES - 2850 CHAMBER

	TITLE	SIZE & NO.	SHEET
1).	Chamber Ass'y	D2635402	1
2).	Innerliner Ass'y	D2635382	1
3).	Innerliner Spotweld Ass'y	D2635381	1
4).	Sheet, Top Ass'y	C2635380	1
5).	Sheet, Bottom Ass'y	C2635377	1
6).	Sheet, R. Baffle Ass'y	B2635371	2
7).	Can Ass'y	B2632196	2
8).	Partition Ass'y	D1643276	3
9).	Panel Ass'y, Rear	D2635394	3
10).	Panel Ass'y, R. Side	D2635396	3
11).	Panel Ass'y, Bottom	D2635397	3
12).	Bezel Ass'y	D2635401	3
13).	Cable Ass'y W1	A2635264	4
14).	Cable Ass'y W2	A2635265	4
15).	Weld Ass'y, Tube Guide	B1640309	4
16).	Motor Ass'y, Blower	D2621006	4
17).	Thermoswitch Ass'y	B2602503	5
18).	Heater Ass'y	B2622520	5
19).	Element Ass'y, 20ohm	B2635875	5
20).	CO_2 Ass'y	B2618016	6
21).	Injector Ass'y, CO_2 Single Stem	B1647840	6
22).	CO_2 Valve & Bracket Ass'y	B1647407	6
23).	Plate Ass'y, Power	C2635057	7
24).	Capacitor Ass'y, Mod	A2635048	7
25).	Cable Ass'y	A2635833	8

	TITLE	SIZE & NO.	SHEET
26).	Ship Kit Ass'y	C2618020	10
27).	CO_2 Ass'y, Single Stem	B2618015	11
28).	Injector Ass'y CO_2 Single Stem	B1647840	11
29).	CO_2 Vlave & Bracket Ass'y	B1647407	11

PL 2635402 REV ____ SHT 1 OF 11

DESCRIPTION TOP ASS'Y 2850 CHAMBER

NEXT ASSY END ITEM BY [illegible] CK'D ____ APPD ____

REV	ECN	DATE	BY	APP
R	1521	7-23-[illegible]	BGM	[illegible]
S	1629	10-4-[illegible]	BGO	[illegible]
T	1720	12-5-70	[illegible]	[illegible]

DELTA DESIGN
5725 KEARNY VILLA RD.
SAN DIEGO, CALIF.

JOB NO. ____ S.O. NO. ____
QTY ____ PROM DATE ____ ACT ____
RUN * ____ MACH ____

ITEM NO	ASSY & QTY -001	-002	-003	-004	INDENTURE	SIZE	DRAWING NO.	REV	DESCRIPTION	MFG OR MFG NO	STOCK OR PART NO.	JOB QTY	AUT	QTY REC	FAB CD	PURCHASING P.O. NO	QTY	DUE	REC	MANUFACTURE STD HRS	ACT EST	ACT COM	COM	PLATE/PAINT IN	OUT	AREA
00	X					D	2635402	K	CHAMBER ASS'Y. (2850)		2635402															
00																										
00	REF					D	1635840		SCHEMATIC																	
00	REF					D	1635838	A	SCHEMATIC 240 VAC																	
00	REF					C	1635836		125 TO 240 VAC CONVERSION																	
00	REF		⚠			C	1640222	A	LN2 INSTAL. ASS'Y. - VALCOR VALVE (IN FIELD)		1640222-006															
00	REF					D	1643453	B	CO2 TO LN2 CHMB. CONVERSION ASS'Y.																	
00	REF					D	2639166	C	CO2-LN2 DUAL CONVERSION																	
00	REF					D	1640082	B	OPTION CO2 TO LN2 WITH REDUNDANT VALVE		1640082-001															
00	REF					D	1640082	B	OPTION CO2-LN2 DUAL WITH REDUNDANT VALVE		1640082-002															
00	REF					P/L	1648289		TOP ASSY, TYPE III CONTROLLER																	
00																										
01	1					D	2635382	B	INNERLINER ASS'Y.		2635382															
00																										
00																										
01	1					D	2635381	A	INNERLINER SPOTWELD ASS'Y.		2635381															
00																										
00																										
01	1					C	2635380	A	SHEET, TOP ASS'Y.		2635380															
00																										
01	1					C	2635380	A	SHEET, TOP		1635380															
02	2					A	1635379		SHEET, ANGLE		1635379															
03	1					A	1635378		SHEET, DEFLECTOR		1635378															
04	1					B	1635366		SHEET, ANGLE		1635366															
05																										
06																										
02	1					C	2635377		SHEET, BOTTOM ASS'Y.		2635377															
00																										
01	1					C	2635377		SHEET, BOTTOM		1635377															
02	2					A	1635379		SHEET, ANGLE		1635379															
03	1					B	1635366		SHEET, ANGLE		1635366															
04																										
05																										

NOTES: ⚠ THESE DWGS. ARE FOR OPTIONAL EQUIP. ONLY, AND ARE NOT PART OF BASIC CHAMBER.

P/L 2635402

PL 2635402 REV ____ SHT 2 OF 11

DESCRIPTION TOP ASS'Y (2850)

NEXT ASSY END ITEM BY ~~ATOMA~~ ACK'D ____ APPD ____

REV	ECN	DATE	BY	APP

DELTA DESIGN
5725 KEARNY VILLA RD
SAN DIEGO, CALIF

JOB NO. ____ S O NO ____
QTY ____ PROM DATE ____ ACT ____
RUN # ____ MACH ____

ITEM NO	ASSY & QTY -001	-002	-003	-004	INDENTURE	SIZE	DRAWING NO.	REV.	DESCRIPTION	MFG OR MFG NO	STOCK OR PART NO.	JOB QTY	AUL	QTY REC	FAB CD	PURCHASING PO NO	QTY	DUE	REC	MANUFACTURE STD	ACT HRS	EST COM	ACT COM	PLATE/PAINT IN	OUT	AREA
06																										
03	1					D	1635376	C	SHEET, RIGHT		1635376															
04	1					D	1635375	B	SHEET, LEFT		1635375															
05																										
06	1					B	1635373	B	SHEET, TOP DEFLECTOR		1635373															
07	1					B	1635372	A	SHEET, BOTTOM DEFLECTOR		1635372															
08	1					B	1630007	C	RETAINER		1630007															
09	1					B	1634771	C	TUBE, CO_2 VENT		1634771-005															
10	1					B	1634780	E	TUBE, LN_2 GUIDE		1634780-010															
11	1					B	1634774		TUBE, PROBE GUIDE		1634774-004															
12																										
13																										
14																										
15																										
02	1					B	2635371		SHEET, RIGHT BAFFLE ASS'Y.		2635371															
00																										
01	1					B	1635370		SHEET, RIGHT BAFFLE		1635370															
02	1					A	1635369		SHEET, PROBE GUARD		1635369															
03																										
03	1					B	1635368		SHEET, LEFT BAFFLE		1635368															
04	1					C	1635367	B	SCROLL	1635367	M/F 2100701															
05	1					B	2632196	D	CAN ASS'Y.		2632196-004															
00																										
01	1					B	1632350	C	CAN		1632350-004															
02																										
03																										
04	2					A	1631838	A	TAB		1631838															
05	1								GROMMET		1500026															
06																										
06	16								*4 × 1/4 PHP-SMS		6904142-400															
07	6								*6 × 3/8 PHP-SMS		6906382-400															
08	1					B	1600015		SCROLL RING		1600015															
09	1					C	1635374		SHEET, BACK		1635374															

NOTES:

P/L 2635402

P.L 2635402 REV ____ SHT 3 OF 11
DESCRIPTION TOP ASS'Y (2850)
NEXT ASSY END ITEM BY [illegible] CK'D ____ APPD ____

REV ECN DATE BY APP

DELTA DESIGN
5725 KEARNY VILLA RD
SAN DIEGO, CALIF

JOB NO. ____ S.O NO ____
QTY ____ PROM DATE ____ ACT ____
RUN * ____ MACH ____

ITEM NO	ASSY & QTY -001	-002	-003	-004	INDENTURE	SIZE	DRAWING NO.	REV	DESCRIPTION	MFG OR MFG NO.	STOCK OR PART NO.	JOB QTY	AUL	QTY REC	FAB CD	PURCHASING P.O. NO	QTY	DUE	REC	MANUFACTURE ACT STD	EST HPS	ACT COM	ACT COM	PLATE/PAINT IN	OUT	AREA
10	A/R								RTV (RED)	DOW-CORNING	2400003															
11																										
12																										
13																										
14																										
02	1					D	1643276	A	PARTITION ASS'Y.		1643276-001															
00																										
00	REF					C	1635989	D	SILKSCREEN		1635989															
01	1					D	1643276	A	PARTITION .06 AL.ALY.	3003-H14 FINEBARK	1643276															
02	9								*6-32 RIVNUT, FLT. HD.		1700036															
03	6								*8-32 RIVNUT, FLT. HD.		1700006															
04																										
03	1					D	2635394	C	PANEL ASS'Y., REAR		2635394															
00																										
01	1					D	2635394	C	PANEL, BACK		1635394															
02	8								*6-32 RIVNUT, CSK. HD.	A6-106	1700037															
03																										
04	1					D	1635395	B	PANEL, LEFT SIDE		1635395															
05	1					D	2635396		PANEL ASS'Y., RIGHT SIDE		2635396															
00																										
01	1					D	2635396		PANEL .062 AL. ALY.	3003-H14 FINEBARK	1635396-001															
02	7								*6-32 RIVNUT, CSK. HD.	B.F. GOODRICH A6-106	1700037															
03	1								*8-32 RIVNUT, CSK. HD.	B.F. GOODRICH A8-106	1700005															
04																										
06	1					D	2635397		PANEL ASS'Y., BOTTOM		2635397															
00																										
01	1					D	2635397		PANEL, BOTTOM		1635397-001															
02	4								*6-32 RIVNUT, CSK. HD.	BF GOODRICH A6-106	1700037															
03	4								*10-32 RIVNUT, FLT. HD.	BF GOODRICH A10-80	1700035															
04																										
07	1					D	1635398	B	PANEL, TOP		1635398															
08	1					D	1600526	H	PANEL, FRONT		1500526															
09	1					D	2635401	B	BEZEL ASS'Y.		2635401															

NOTES:

P/L 2635402

PL. 2635402 REV ____ SHT 4 OF 11
DESCRIPTION TOP ASS'Y 2850 CHAMBER
NEXT ASSY END ITEM BY [illegible] CK'D ____ APPD ____

REV ECN DATE BY APP

DELTA DESIGN
5725 KEARNY VILLA RD
SAN DIEGO, CALIF

JOB NO ____ S.O. NO ____
QTY ____ PROM DATE ____ ACT ____
RUN * ____ MACH ____

ITEM NO	ASSY & QTY -001	-002	-003	-004	INDENTURE	SIZE	DRAWING NO.	REV	DESCRIPTION	MFG OR MFG NO	STOCK OR PART NO	JOB QTY	AUL	QTY REC	FAB CD	PURCHASING P.O. NO	QTY	DUE	REC	MANUFACTURE STD	ACT HRS	EST ACT COM	PLATE/PAINT IN	OUT	AREA
00																									
01	2					B	1634689	B	ANGLE, BEZEL		1634689-003														
02	2					B	1634689	B	ANGLE, BEZEL		1634689-004														
03																									
10	1					A	2635264	A	CABLE ASS'Y. (W1)		2635264-001														
00																									
01	A/R								WIRE, 18 AWG	COHU STK.	7700618-999														
02	6								SOLDERLESS TERMINAL	(SPADE)	1500055														
03																									
04																									
11	1					A	2635265	B	CABLE ASS'Y. (W2)		2635265-004														
00																									
01	A/R								WIRE 14 AWG	COHU STK.	7700614-999														
02	A/R								WIRE 18 AWG	COHU STK.	7700618-999														
03	8								SOLDERLESS TERMINAL	(SPADE)	1500055														
04	2								SOLDERLESS TERMINAL	(SPADE)	150054														
05																									
06																									
12	1					A	1602967	D	OUTER PLATE, VENT		1600533														
13	1					A	1602968	D	GASKET, VENT		2400063														
14	1					B	1640309		WELD ASS'Y.-TUBE GUIDE		1640309-001														
00																									
01	1					B	1640309		PLATE (1.25×1.25×.032)	302-304 SST	1640309-101														
02	1					B	1640309		TUBE (.50 O.D.×.028 WALL×1.00 LG.) WELDED & DRAWN		1640309-102														
03																									
15	4								GASKET, STRIP		2400024														
16	1					B	1640100		FLEXIDRIVE	1640100-101	M/F 1500451														
17	1					D	2621006	A	MOTOR ASS'Y., BLOWER		2621006														
00																									
01	1					C	1632174		50/60 Hz MOTOR		2100652														
02	4					B	1632176		INSULATION SPACER		4100174														
03	1					B	1632177		MOTOR PLATE		1632177														
04	8								*10 LOCKWASHER		6610011														

NOTES:

P/L 2635402

PL 2635402. REV ____ SHT 5 OF 11

DESCRIPTION TOP ASS'Y (2850)

NEXT ASSY END ITEM BY ARMACK'D ____ APPD ____

REV	ECN	DATE	BY	APP

DELTA DESIGN
5725 KEARNY VILLA RD
SAN DIEGO, CALIF

JOB NO ____ S.O. NO ____
QTY ____ PROM DATE ____ ACT ____
RUN * ____ MACH ____

ITEM NO	ASSY & QTY -001	-002	-003	-004	INDENTURE	SIZE	DRAWING NO.	REV	DESCRIPTION	MFG OR MFG NO	STOCK OR PART NO.	JOB QTY	ALL	QTY REC	FAB CD	PURCHASING PO NO	QTY	DUE	REC	MANUFACTURE STD	ACT EST HRS	ACT COM	COM	PLATE/PAINT IN	OUT	AREA
05	4								* 10-32 HEX NUT		6710321															
06	1					C	1635327	A	SPACER		4100173															
07	1					B	1632180	A	SCROLL GASKET		0200116															
08	A/R								RTV-106		2400003															
09	1					B	1632186		STRIP WHEEL		2100505															
10	4								* 10-32 × 1½ PHP-MS		6810326-424															
11																										
12																										
13																										
14																										
18	2					B	1600091	B	SHIM, KEEPER △		1600091															
19	2					C	1635605	B	LATCH KEEPER		4100051															
20	4								FOOT, RUBBER		1500416															
21	A/R								INSULATION, FIBERGLASS		2400025															
22	A/R								INSULATION, PRESSTITE		2400026															
23	1					B	2602503	C	THERMOSWITCH ASS'Y.	(S1)	2300004															
00																										
01	1								THERMOSTAT	VULCAN 1DIC2-4	2300004															
02	1					A	1600007	C	BRACKET		1600007															
03																										
24	1								LAMP, NEON	(DS1)	1400082															
25	1								RELAY	(K1)	1400218															
26	1								CAPACITOR .05µf 400V	(C1)	0700520-400															
27	1					B	2622520	A	HEATER ASSY.	(HR1)	2622520															
00																										
01	1					C	1635870	C	SHEET, HEATER		1635870															
02	4					B	1635868		STANDOFF, HEATER		1635868															
03	4								INSULATOR, CERAMIC		1500327															
04	2					B	2635875		ELEMENT 20Ω		2635875-004															
00																										
01	1					B	2635875		ELEMENT, HTR. 20Ω	LYON-RURAL ELECT.	2200005															
02	2								STUD △	BIRNBACH #458	1500327															
03	2								NUT △	BIRNBACH #458	1500327															

NOTES: △ USE ONLY AS REQ'D. TO OPTIMIZE SEAL.

△ ITEMS 2 & 3 ARE SEPARATED FROM STK. ITEM 1500327 AND SUPPLIED TO VENDOR.

P/L 2635402

PL 2635402 REV ____ SHT 6 OF 11
DESCRIPTION TOP ASS'Y. (2850)
NEXT ASSY END ITEM BY Arana CK'D ____ APPD ____

REV	ECN	DATE	BY	APP

DELTA DESIGN
5725 KEARNY VILLA RD
SAN DIEGO, CALIF.

JOB NO. ____ S.O. NO ____
QTY ____ PROM DATE ____ ACT ____
RUN * ____ MACH ____

ITEM NO	ASSY & QTY -001	-002	-003	-004	INDENTURE	SIZE	DRAWING NO.	REV	DESCRIPTION	MFG OR MFG NO	STOCK OR PART NO.	JOB QTY	AUL	QTY REC	FAB CD	PURCHASING P.O. NO.	QTY	DUE	PEC	STD	MANUFACTURE ACT HRS	EST HRS	ACT COM	COM	PLATE/PAINT IN	OUT	AREA
04																											
05																											
05	4					A	1635867		GASKET, INSULATOR		1635867																
06																											
07																											
08																											
28	1					B	2618016	F	CO_2 ASS'Y. (L1)	900 P.S.I. △4	2618016-005																
00																											
~~01~~	~~1~~					~~B~~	~~2618005~~		~~CO_2 VALVE WELDMENT~~		~~2618005-001~~																
02	1					B	1647840		INJECTOR ASS'Y, CO_2 SINGLE STEM		1647840-110																
00																											
~~01~~	~~1~~					~~C~~	~~1618012~~	~~E~~	~~MOD., PIPE PLUG~~	~~1618012-002~~	~~MF 3600078~~																
C1	1								FITTINGS, INJECTOR		3600197																
C2	1					B	1647841		TUBE, CO_2 INJECTOR	TYPE 300 SS, 1/8 O.D., .020 I.D.	1647841-115																
~~C3~~	~~1~~					~~B~~	~~1618006~~	~~B~~	~~TIP, CO_2 INJECTOR~~	~~1618006-002~~	~~4100040~~																
03	3/2								INSULATION	PRESSTITE TYPE 5	2400026																
04	1					B	1647407		CO_2 VALVE & BRACKET ASS'Y.		1647407-001																
00																											
01	1								SOLENOID VALVE	(900 P.S.I.)	1800117																
02	1					B	1645008		BRACKET, CO_2		1645008-101																
03	1								NIPPLE, BRASS-1/8 NPT × 2.00		3601038																
04	1								COUPLING 1/8 NPT		3600102																
05	4								* 8-32 × 3/8 PHP-MS		6808323-804																
06	4								* 8 SPLIT LOCKWASHER		6608010																
07	4								* 8-32 HEX NUT		6708320																
08																											
09																											
10																											
05																											
06																											
29	1								TERMINAL BLOCK	(TB1)	1400572																
~~30~~	~~1~~					~~C~~	~~2635055~~	~~A~~	~~PANEL ASS'Y, SIGNAL~~	~~(A3)~~	~~2635055~~																
00																											

NOTES: △4 CO_2 PSI OPTIONAL PER CUSTOMER PREFERENCE

P/L 2635402

PL 2635402 REV ____ SHT 7 OF 11

DESCRIPTION TOP ASS'Y (2850)

NEXT ASSY END ITEM BY ~~Arma~~ CK'D ____ APPD ____

REV	ECN	DATE	BY	APP

DELTA DESIGN
5725 KEARNY VILLA RD
SAN DIEGO, CALIF

JOB NO ____ S O NO ____
QTY ____ PROM DATE ____ ACT ____
RUN * ____ MACH ____

ITEM NO	ASSY & QTY -001	-002	-003	-004	INDENTURE	SIZE	DRAWING NO.	REV	DESCRIPTION	MFG OR MFG NO	STOCK OR PART NO	JOB QTY	AUL	QTY REQ	FAB CD	PURCHASING PO NO	QTY	DUE	REC	MANUFACTURE STD	ACT EST HRS	ACT COM	COM	PLATE/PAINT IN	OUT	AREA
00																										
01	1					B	1635054	C	PANEL, SIGNAL		1635054															
02	1					B	2600409		PLUG MOD, AMPHENOL	(P1)	2600409															
00																										
01	1								PLUG, 4 PIN AUDIO	AMPHENOL 91 MC4M	2000051															
02	1								CHAIN, 4"		1500226															
03	2								*6 EYELET		3600101															
04	1								* 2-56 x 5/32 PHP-MS																	
05	A/R								WIRE, 20 GA BUS																	
06	1								*2 FLAT WASHER		6602000000															
07																										
03	1								SOCKET	(J1)	2000044															
04	1								TERMINAL BLOCK	(TB1)	1400509															
05	1					A	1600012	C	NULL TERMINAL COVER		1600012															
06	4								*6 x 1/2 PHP-SMS		6906120-400															
07	2								*6-32 x 3/4 PHP-MS		6806323-404															
08																										
09																										
10																										
~~01~~	~~1~~					~~C~~	~~2635058~~	~~K~~	~~PANEL ASS'Y., POWER~~	~~(A2) 125V~~	~~2635058~~															
00																										
00																										
01	1					C	2635057	H	PLATE ASS'Y., POWER		2635057-003															
00																										
00	REF					C	1635604	A	SILKSCREEN MASTER		1635604-003															
01	1					C	2635057	H	PANEL .08 AL ALY. SHT.	6061-T6	1635057-003															
02	4								*6-32 RIVNUT, CSK. HD.	BF GOODRICH A6-106	1700037															
03																										
02	1								FUSEHOLDER	(XF1)	1400050															
03	2					A	2635048	A	CAPACITOR, MOD.	(C1,C2)	2635048															
00																										
01	1								CAPACITOR		0800007															
02	1								SWAGE NUT		1700029															

NOTES:

P/L 2635402

P.L. 2635402 REV ____ SHT 8 OF 11

DESCRIPTION TOP ASS'Y (2850)

NEXT ASSY END ITEM BY Arma CK'D ____ APPD ____

REV	ECN	DATE	BY	APP

DELTA DESIGN
5725 KEARNY VILLA RD
SAN DIEGO, CALIF

JOB NO ____ S.O. NO. ____
QTY ____ PROM DATE ____ ACT ____
RUN * ____ MACH ____

ITEM NO	ASSY & QTY -001	-002	-003	-004	INDENTURE	SIZE	DRAWING NO.	REV	DESCRIPTION	MFG OR MFG NO	STOCK OR PART NO.	JOB QTY	AUL	QTY REC	FAB CD	PURCHASING PO NO	QTY	DUE	REC	MANUFACTURE STD	ACT HRS	EST COM	ACT COM	PLATE/PAINT IN	OUT	AREA
03																										
04	1								STRAIN RELIEF		1500077															
~~05~~	~~2~~								~~PLUG, BUTCH 1/2"~~		~~3600081~~															
06	1								PLUG, POWER		2000135															
07	85 FT.								POWER CORD		1500394															
08	1								* 6-32 × 1/2 PHP-MS		6806321-224															
09	2								* 6-32 × 3/8 PHP-MS		6806323-824															
10	4								*6 SPLIT LOCKWASHER		6606012															
11	3								SOLDERLESS TERMINAL	(RING)	1500071															
12	1								SOLDERLESS TERMINAL	(RECEPT.)	1500066															
13	5"								WIRE, 14 AWG	COHU STK.	7700314-999															
14	2								*6-32 HEX NUT		6706322															
15	1								SOLDERLESS TERMINAL	(RING)	1500056															
16																										
17																										
18																										
19																										
20																										
~~32~~	~~1~~								~~FUSE, 15A~~	~~(AC-F1)~~	~~1400037~~															
33	1								PROBE	(R1)	2300031															
34	1					A	2635833	B	CABLE ASS'Y.	(W3)	2635833-002															
00																										
00	REF					D	1635841	A	SCHEMATIC DIAGRAM	125V																
01	A/R								WIRE, 14 AWG (TEFLON)		1500330															
02	A/R								WIRE, 18 AWG (TEFLON)		1500387															
03																										
04	4								SOLDERLESS TERMINAL	(SPADE)	1500054															
05	2								SOLDERLESS TERMINAL	(SPADE)	1500055															
06	3								SOLDERLESS TERMINAL	(RING)	1500062															
07																										
08																										
35	1					B	1600004	D	COVER, BLOWER MTR.		1600004															
36	6								WIRE NUT, SMALL	(E1-E4, E7, E8)	1500188															

NOTES:

P/L 2635402

PL 2635402 REV ____ SHT 9 OF 11
DESCRIPTION TOP ASSY (2850)
NEXT ASSY END ITEM BY [illegible] CK'D ____ APPD ____

REV	ECN	DATE	BY	APP

DELTA DESIGN
5725 KEARNY VILLA RD
SAN DIEGO, CALIF.

JOB NO ____ S.O NO ____
QTY ____ PROM DATE ____ ACT ____
RUN * ____ MACH ____

ITEM NO	ASSY & QTY -001	-002	-003	-004	INDENTURE	SIZE	DRAWING NO.	REV	DESCRIPTION	MFG OR MFG NO	STOCK OR PART NO	JOB QTY	AUL	QTY REC	FAB CO	PURCHASING P.O. NO.	QTY	DUE	REC	MANUFACTURE STD HRS	ACT EST HRS	ACT COM	COM	PLATE/PAINT IN	OUT	AREA
37	1								GROMMET		1500026															
38	1								PLUG (3/8 DIA HOLE)		3600082															
39	1								PLUG (1/2 DIA HOLE)		3600081															
40	1								PLUG (1 1/4 DIA HOLE)		1700142															
41	1								ADAPTER BUSHING		4100003															
42	1								NUT		1500735															
43	2					A	1635610		SPACER		1635610															
44	2					B	1648658		SUPPORT BLOCK - INNER LINER		1648658-101															
45	2								SOLDERLESS TERMINAL	(RING)	1500062															
46																										
47																										
48	A/R						△5		WIRE, 14 AWG (TEFLON)		1500380															
49	A/R								WIRE, 14 AWG	COHU STK.	7700614-999															
50	A/R								WIRE, 20 AWG	COHU STK.	7700620-999															
51	2								GROMMET, 1/2"		1500032															
52	6								CABLE TIE		1500014															
53	6								PUSH MOUNT		1500013															
54	1								OUTLET, CONVENIENCE	(J1)	1500083															
55	4								*4 × 1/2 PHP-SMS		6904120-400															
56																										
57																										
58																										
59	2								* 6-32 × 3/8 PHP-MS		6806323-204															
60	17								* 6-32 × 1/2 PHP-MS		6806321-204															
61	40								* 6 × 1/2 PHP-SMS		6906126-400															
62	10								* 6 × 1/2 FHP-SMS		6906120-100															
63	11								* 8 × 1/2 THP-SMS		6908120-600															
64	8								* 10-32 × 1/2 PHP-MS		6810321-204															
65	1								* 8-32 × 1/2 THP-MS		6808321-206															
66	13								* 6 LOCKWASHER		6606010															
67	6								* 10 SPLIT LOCKWASHER		6610010															
68																										
69	4								*6 HEX NUT		6706320															

NOTES: △5 INDICATED ON SHT. 5 OF DWG.

P/L 2635402

PL 2635402 REV — SHT 10 OF 11

DESCRIPTION TOP ASS'Y (2850)

NEXT ASSY END ITEM BY ~~ARNOCK~~'D ____ APPD ____

REV	ECN	DATE	BY	APP

DELTA DESIGN
5725 KEARNY VILLA RD
SAN DIEGO, CALIF

JOB NO ____ S.O NO ____
QTY ____ PROM DATE ____ ACT ____
RUN # ____ MACH ____

ITEM NO	ASSY & QTY -001	-002	-003	-004	INDENTURE	SIZE	DRAWING NO.	REV	DESCRIPTION	MFG OR MFG NO	STOCK OR PART NO.
70	1								* 10-32 × 3/4 PHP-MS		6810323-404
71	4								* 10 FLATWASHER		6610000
72	2								* 10-32 HEX NUT		6710320
73	1					C	2618020		SHIP KIT △		2618020-001
00											
01	1								HOSE		3600123
02	1								STRAINER		1400110
03	1								NUT		3600120
04	1								SLEEVE		3600121
05	1								CONNECTOR		3600004
06	1								CONNECTOR		3600119
07	1								WASHER		3600122
74	1								STRAIN RELIEF		1500077
75	1								PLUG, POWER P1 120V		2000135
76	8-6								POWER CORD		1500394
77	2								CAPACITOR C1, C2		2635048
78	1					B	2600409		PLUG P2		2600409
79	1								SOCKET J2		2000044
80	1								TERMINAL BLOCK TB2		1400509
81	1					A	1600012		NULL TERMINAL COVER		1600012
82	1								CIRCUIT BREAKER CB1 120V	AM2-A3-A20-3	1400008
83	1							△	CIRCUIT BREAKER CB1 240V	AM2-A3-A15-2	1400002
84	1							△	PLUG, POWER P1 240V	HUBBLE #4570-C	2000224
85	1					C	1647767		CASE, CIRCUIT BREAKER		1647767-101
86	1					B	1643476		IDENTIFICATION PLATE		1643476-101
87	5								SOLDERLESS TERMINAL (RING)		1500071
88	2								SCREW #4 x 1/4 PHPSM		6904140-400
89	4								SCREW #6 x 1/4 PHPSM		6906140-400
90	2								SCREW #6-32 x 3/4 PHPMS		6806323-404
91											
92	1								SCREW #10-32 PHPMS		6810321-404
93	3								LOCK WASHER (EXT) #10		6610031-000
94	2								NUT #10		6710321-000

JOB QTY	QTY REC	FAB CD	PURCHASING P.O. NO	QTY	DUE	REC	MANUFACTURE STD	ACT EST HRS	ACT COM	COM	PLATE/PAINT IN	OUT	AREA

NOTES: △ TO BE SHIPPED WITH CHAMBER.

P/L 2635402

PL 2635402 REV ____ SHT 11 OF 11

DESCRIPTION TOP ASSY (2850)

NEXT ASSY END ITEM BY BGM CK'D ____ APPD ____

REV	ECN	DATE	BY	APP

DELTA DESIGN
5725 KEARNY VILLA RD
SAN DIEGO, CALIF

JOB NO. ____ S O NO ____
QTY ____ PROM DATE ____ ACT ____
RUN # ____ MACH ____

ITEM NO	ASSY B QTY -001	-002	-003	-004	INDENTURE	SIZE	DRAWING NO.	REV	DESCRIPTION	MFG OR MFG NO	STOCK OR PART NO.	JOB QTY	ALL	QTY REC	FAB CD	PURCHASING PO NO	QTY	DUE	REC	MANUFACTURE STD	ACT HRS	EST COM	ACT COM	PLATE/PAINT IN	OUT	AREA
95	1					B	2618015	C	CO_2 ASSY SINGLE STEM	(300 PSI) △1	2618015-005															
00																										
~~01~~	~~1~~					~~B~~	~~2618005~~		~~CO_2 VALVE W/COMP ASSY~~		~~2618005-002~~															
02	1					B	1647840		INJECTOR ASSY CO_2 SINGLE STEM		1647340-009															
00																										
01	1								FITTINGS, INJECTOR		3600197															
02	1					3	1647842		TUBE, CO_2 INJECTOR	TYPE 300 SS 1/8 O.D., .035 I.D.	1647842-115															
03																										
03	N/R								INSULATION	PRESSTITE TYPE 5	2400026															
04	1					B	1647407		CO_2 VALVE + BRACKET ASSY		1647407-002															
00																										
01																										
02	1					B	1645008		BRACKET, CO_2		1645008-101															
03	1								NIPPLE, BRASS - 1/8 NPT x 2.00		3601038															
04	1								COUPLING, 1/8 NPT		3600102															
05	4								#8-32 x 3/8 PHP-MS		6808323-804															
06	4								#8 LOCKWASHER I.D.		6608010-000															
07	4								#8 HEX NUT		6708320-000															
08	1								SOLENOID VALVE (300 PSI)		1800105															

NOTES: △1 CO_2 PSI OPTIONAL PER CUSTOMER PREFERENCE

P/L 2635402

REVISIONS				
ZONE	LTR	DESCRIPTION	DATE	APPD
	A	PER ECN M2027 F.I.O 5-9-80 CHG'D VIEW OF ITEM 1 REMOVED TERM BRD COVER	5-9-80	[illegible]

—INSTRUCTIONS FOR CHAMBER RETROFIT—
TYPE V CONTROLLER

1. REMOVE CHAMBER RIGHT SIDE PANEL TO ALLOW ACCESS TO CONTROLLER & PROBE GUIDE TUBE. ON MODELS 2850, 5900 & 7650 TOP PANEL MUST BE REMOVED AS WELL.
2. REMOVE EXISTING CONTROLLER & ITS PROBE. DO NOT DESTROY BLACK PRESS-TITE.
3. NOTE CHAMBER REAR PANEL CONFIGURATION & DECIDE WHICH MEANS OF MOUNTING THE REMOTE INTERFACE CABLE ASSY. PLUG BEST SUITS YOUR CHAMBER & REQUIREMENTS →
4. MAKE THE REAR PANEL MODIFICATIONS
5. MOUNT THE REMOTE INTERFACE CABLE ASSY PLUG TO THE REAR PANEL—SEE DRAWING D1650223 & PARTS LIST FOR CABLE & HARDWARE CALLOUTS
6. INSERT THERMOCOUPLE ASSY IN PROBE GUIDE TUBE & SECURE IN PLACE USING BLACK PRESS-TITE—SEE DRAWING D1650223
—CAUTION—DO NOT SHORTEN THERMOCOUPLE ASSY WIRE FOR ANY REASON
7. INSTALL TYPE V CONTROLLER & WIRE PER WIRING DIAGRAM D1635840 OR D1635838 SHEET 2 OF 2. IF NECESSARY, COIL EXCESS THERMOCOUPLE WIRE & POSITION IT BETWEEN CONTROLLER & CHAMBER TO ACT AS A SERVICE LOOP IF NEEDED
8. REPLACE TOP PANEL IF YOU HAVE A MODEL 2850, 5900 OR 7650
9. BEFORE REPLACING SIDE PANEL SEE CONTROLLER MANUAL FOR SET UP & CALIBRATION PROCEDURES
10. CALIBRATE CONTROLLER
11. REPLACE SIDE PANEL

IF YOUR MODEL 2850 CHAMBER REAR PANEL LOOKS LIKE THIS, MODIFY BY:

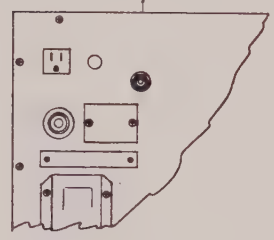

1/2 SCALE

1. ADD CUTOUT AT DIMENSION SHOWN

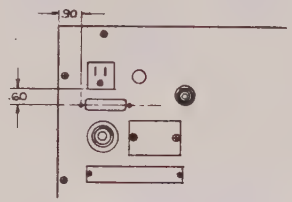

REMOTE INTERFACE CABLE ASSY PLUG CUTOUT DIMENSIONS

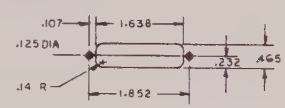

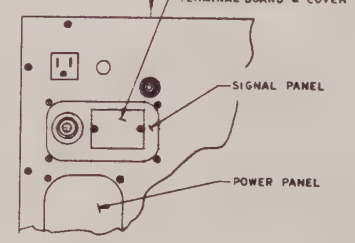

1/2 SCALE

1. REMOVE OLD SIGNAL PANEL & REPLACE WITH NEW ITEM 1.

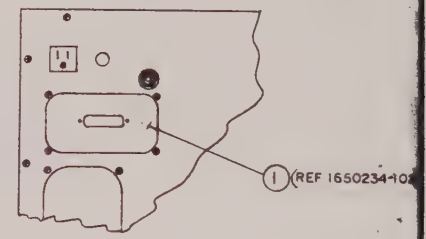

△ FINISH (IF APPLICABLE)

△ MATL (IF APPLICABLE)

NOTES: UNLESS OTHERWISE SPECIFIED

1	2635402	2850						
QUANTITY	NEXT ASSY	USED ON	SERIAL NO.	DATE EFF	SHOW REV	MATERIAL △		
APPLICATION			EFFECTIVITY			FINISH △		

ENGINEERING ACTIVITY: M1945
DESIGN:
DRAFTED: OLEJNIK 12-17-79
CHECKED:
APPROV:
RELEASE:
DO NOT SCALE DWG

DELTA DESIGN INC.

TITLE: CHAMBER, TYPE V CONTROLLER RETROFIT 2850

SIZE: D | CODE IDENT: 1650239

SCALE: | SHEET 1 OF 1

BLUE CARD

REVISIONS				
ZONE	LTR	DESCRIPTION	DATE	APPD

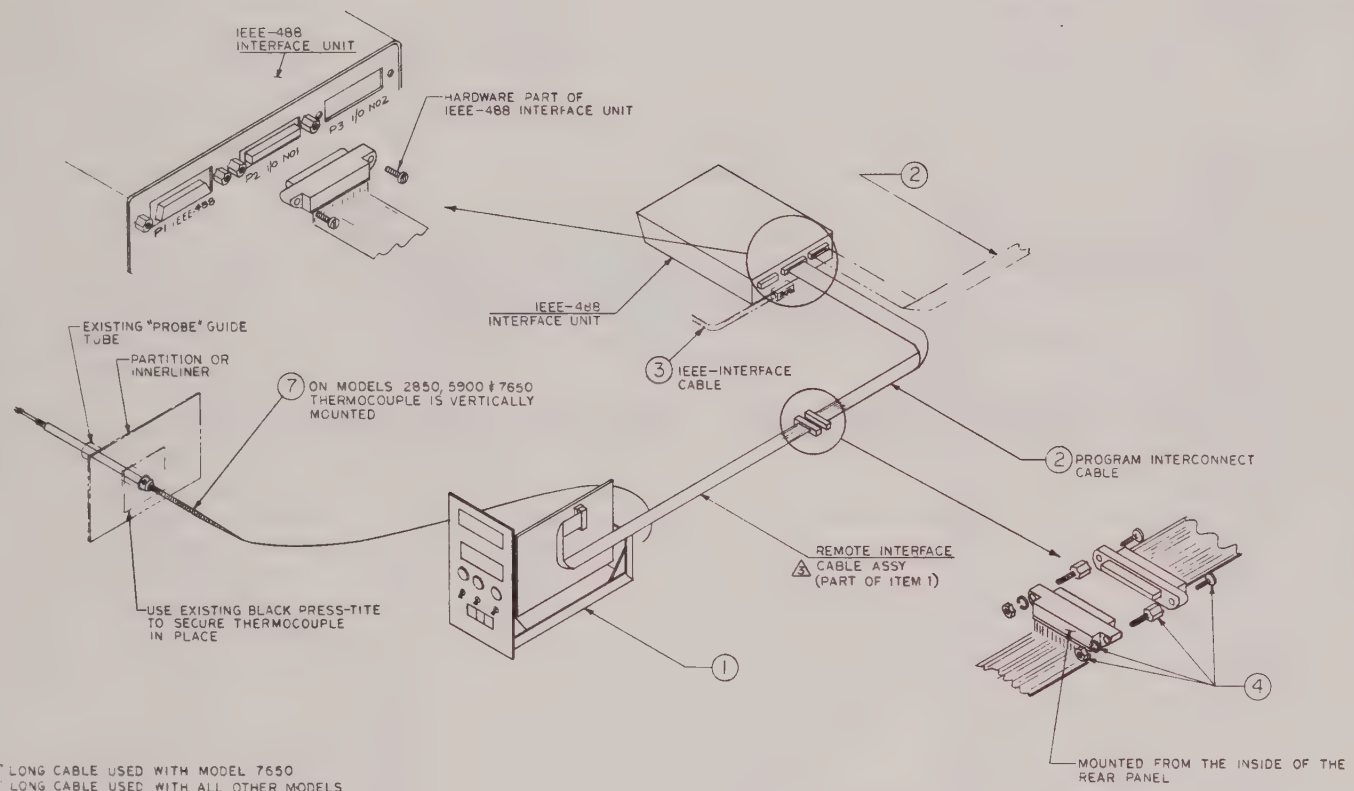

4 36" LONG CABLE USED WITH MODEL 7650
28 LONG CABLE USED WITH ALL OTHER MODELS

4 FINISH (IF APPLICABLE)

4 MATL (IF APPLICABLE)

NOTES: UNLESS OTHERWISE SPECIFIED

DASH	QTY	NEXT ASSY	USED ON
		2635873	4,45
	1	2636342	4400
	1	2635661	5900
	1	2636-23	5900
	1	2635402	2900
	1	2605 10	2300

APPLICATION

SERIAL NO. | DATE EFF | DWG REV

EFFECTIVITY

UNLESS DIMENSIONAL TOLERANCE
DIMENSIONS ARE IN INCHES
TOLERANCES ON
DECIMALS .XX ± .010 .XXX ± .005
ANGLES ± 30'
FRACTIONAL TOLERANCES
.XXX ± .005 .XXX ± .005
.XX ± .010 .XX ± .010
.X ± .030 .X ± .030
.XXX ± .005 .XXX ± .005
.XX ± .010 .XX ± .010
.X ± .030 .X ± .030

MATERIAL 4

FINISH 4

ENGINEERING ACTIVITY
M. J. 752

DESIGN	
DRAFTED	OLE JUNK 11-29-9
CHECKED	
APPROV	
RELEASE	

DO NOT SCALE DWG

DELTA DESIGN INC.
A SUBSIDIARY OF CONRAC CORP.
SAN MARINO, CALIFORNIA

TITLE: INTERCONNECT ASSY.
TYPE V CONTROLLER WITH
IEEE-488

SIZE D | CODE IDENT | 1650223

SCALE | SHEET 1 OF 1

PL 1650223 REV ____ SHT 1 OF 1

DESCRIPTION INTERCONNECT ASSY TYPE V CONTROLLER WITH IEEE-488

NEXT ASSY MULTI-USAGE BY F.J.O. CK'D ____ APPD ____

REV	ECN	DATE	BY	APP

DELTA DESIGN
5725 KEARNY VILLA RD.
SAN DIEGO, CALIF

JOB NO. ____ S.O. NO. ____
QTY ____ PROM DATE ____ ACT ____
RUN * ____ MACH ____

ITEM NO	ASSY & QTY -001	-002	-003	-004	INDENTURE	SIZE	DRAWING NO.	REV	DESCRIPTION	MFG OR MFG NO.	STOCK OR PART NO.	JOB QTY	ALL	QTY REC	FAB CD	PURCHASING P.O. NO	QTY	DUE	REC	MANUFACTURE STD	ACT HRS	EST COM	ACT COM	PLATE/PAINT IN	OUT	AREA
00	X					D	1650223		INTERCONNECT ASSY- TYPE V CONTROLLER WITH IEEE-488		1650223-001															
00																										
00																										
00																										
00																										
00																										
00																										
01	REF					D	1650160		TYPE V CONTROLLER		1650160-001															
02	1								PROGRAM INTERCONNECT	CABLE																
03	1								IEEE-488 INTERFACE	CABLE																
04	1								JACK SOCKET ASSY.	ANSLEY #609-003	1700324															
05																										
06																										
07	1					B	1650230		THERMOCOUPLE ASSY	MULTI-USAGE	1650230-001															

NOTES:

P/L 1650223

REVISIONS				
ZONE	LTR	DESCRIPTION	DATE	APPD
	A	PER ECN M2052 THAMES 6-13-70 TAB LATION [illegible]		

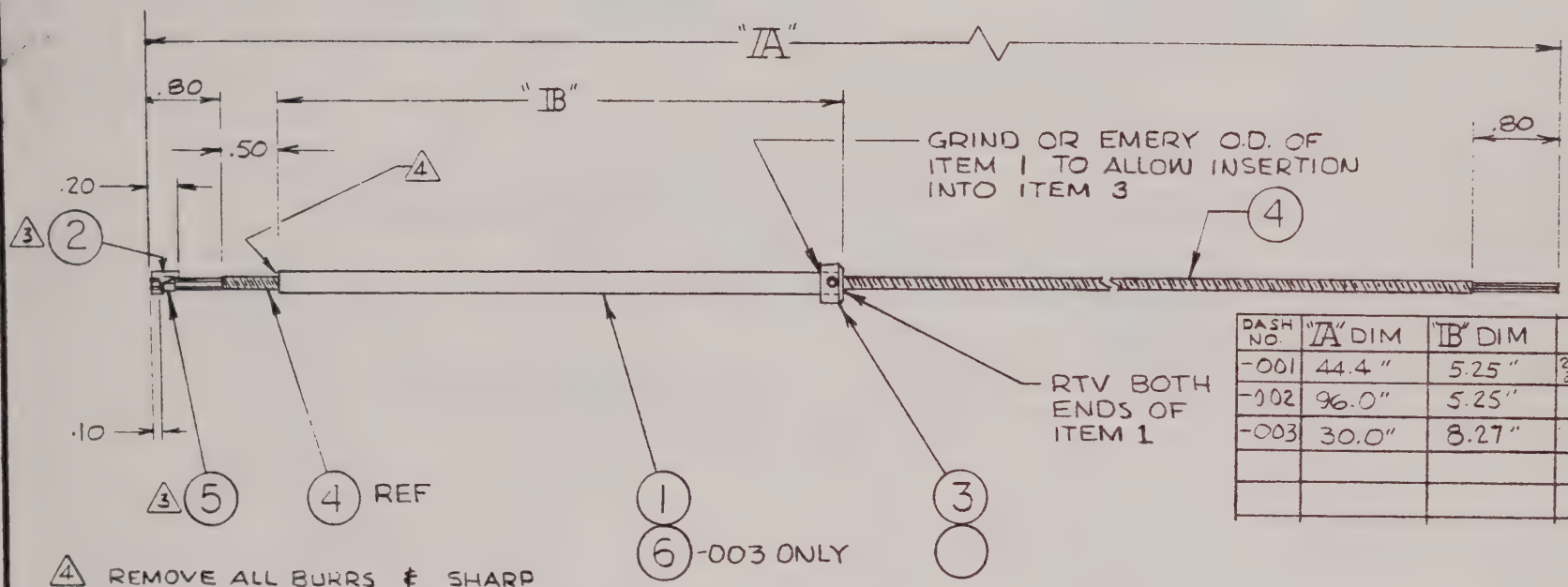

DASH NO.	"A" DIM	"B" DIM	USED ON
-001	44.4"	5.25"	2300 THRU 7650, 2850A
-002	96.0"	5.25"	8000
-003	30.0"	8.27"	2300A

4 REMOVE ALL BURRS & SHARP EDGES FROM I.D. OF ITEM 1 (BOTH ENDS)

3 INSURE ITEM 5 IS SOLIDLY CRIMPED OVER ITEM 4 — THEN ITEM 2 IS CRIMPED OVER ITEM 5

FINISH (IF APPLICABLE)

MATL (IF APPLICABLE)

NOTES: UNLESS OTHERWISE SPECIFIED

DASH	QTY	NEXT ASSY	USED ON	SERIAL NO.	DATE EFF	DWG REV
003	1	MULTI-USAGE				
002	1	1650223	8000			
001	1	1650223				

APPLICATION — EFFECTIVITY

UNLESS OTHERWISE SPECIFIED DIMENSIONS ARE IN INCHES TOLERANCES ON
DECIMALS .XX ± .03 .XXX ± .010
ANGLES 0°30'
HOLE TOLERANCES
.013 THRU .125 +.005 -.001
.125 THRU .250 +.005 -.001
.250 THRU .500 +.006 -.001
.500 THRU .750 +.006 -.001
.750 THRU .250 +.006 -.001

MATERIAL 1
FINISH 2

ENGINEERING ACTIVITY M1952

DESIGN
DRAFTED OLEJNIK 12/6/70
CHECKED
APPROV
RELEASE

DO NOT SCALE DWG

DELTA DESIGN INC.
A SUBSIDIARY OF CONU INC.
SAN DIEGO, CA. 92123

TITLE: THERMOCOUPLE ASSY.

SIZE B | CODE IDENT | 1650230

SCALE | SHEET 1 OF 1

P.L 1650230 REV ____ SHT 1 OF 1
DESCRIPTION THERMOCOUPLE ASSY.
NEXT ASSY MULTI USAGE BY F.J.O. CK'D ____ APPD ____

REV	ECN	DATE	BY	APP

DELTA DESIGN
5725 KEARNY VILLA RD.
SAN DIEGO, CALIF.

JOB NO. ____ S.O. NO. ____
QTY ____ PROM DATE ____ ACT ____
RUN * ____ MACH ____

ITEM NO	ASSY & QTY -001	-002	-003	-004	INDENTURE	SIZE	DRAWING NO.	REV	DESCRIPTION	MFG OR MFG NO.	STOCK OR PART NO.	JOB QTY	ALL	QTY REC	FAB CD	PURCHASING P.O. NO	QTY	DUE	REC	MANUFACTURE ACT STD	EST HRS	ACT COM	ACT COM	PLATE/PAINT IN	OUT	AREA
00	X					B	1650230		THERMOCOUPLE ASSY.		1650230-001															
00		X				B	1650230		THERMOCOUPLE ASSY		1650230-002															
00			X			B	1650230		THERMOCOUPLE ASSY		1650230-003															
00																										
00																										
00																										
00																										
01	1	1				B	1650230		TUBE, ALUMINUM		1650230-101															
									3/16 O.D. X .022 WALL X 5 1/4 LONG																	
02	1	1	1			B	1650230		TUBE, ALUMINUM		1650230-102															
									3/16 O.D. X .022 WALL X .20 LONG																	
03	1	1	1						COLLAR, SET SCREW	BERG # CSS	1700292															
04	4'								WIRE, THERMOCOUPLE	IRON CONSTANTAN	1501375															
		8'							" "	" "	1501375															
			30"						" "	" "	1501375															
05	1	1	1						QUIKTIP	# 128543	1700327															
06			1				B1650230		TUBE, ALUMINUM		1650230-103															
									3/16 O.D. X .022 WALL X 8.27" LONG																	

NOTES:

P/L 1650230

DELTA DESIGN

INC.

SAN DIEGO, CALIFORNIA

www.manualsplus.com

1024520